RICKARD

INTELLIGENT COMFORT CONTROL

ELECTRONIC VARIABLE VOLUME DIFFUSER MLM+

VCD,VRD,VSD1

2

- VAV DIFFUSERS PREVENT DUMPING
- VAV DIFFUSERS SAVE FAN
- ENERGY HEATING AND COOLING
- EXCELLENT THROW & FLOW
- HIGH INDUCTION RATES
- NO MAINTENANCE
- ACCURATE ONBOARD SENSING
- ENERGY SAVING - LOW PRESSURE LOSS
- WIDE RANGE
- ADJUSTABLE MIN & MAX FLOW
- 2 YEAR WARRANTY
- REHEAT, OCCUPANCY, FLOW MEASUREMENT

FEATURES

Rickard VAV Diffusers control Room Temperature by adjusting the volume of air at the diffuser outlet. By changing the diffusers exit geometry, Coanda, Air Velocity and Throw is maintained at minimum and maximum volume. This technology prevents cold air from dumping at minimum, ensures excellent ventilation, air mixing, Air Change Effectiveness (ACE) and therefore thermal comfort (ADPI). Rickard VAV diffusers reduce pressure loss in the system due to their aerodynamic design and the absence of restrictions in the duct work.

PERFORMANCE

Rickard VAV Diffusers control Room Temperature by adjusting the volume of air at the diffuser outlet.

By changing the diffusers exit geometry, Coanda, Air Velocity and Throw is maintained at minimum and maximum volume.

This technology prevents cold air from dumping at minimum, ensures excellent ventilation, air mixing, Air Change Effectiveness (ACE) and therefore thermal comfort (ADPI).

Rickard VAV diffusers reduce pressure loss in the system due to their aerodynamic design and the absence of restrictions in the duct work

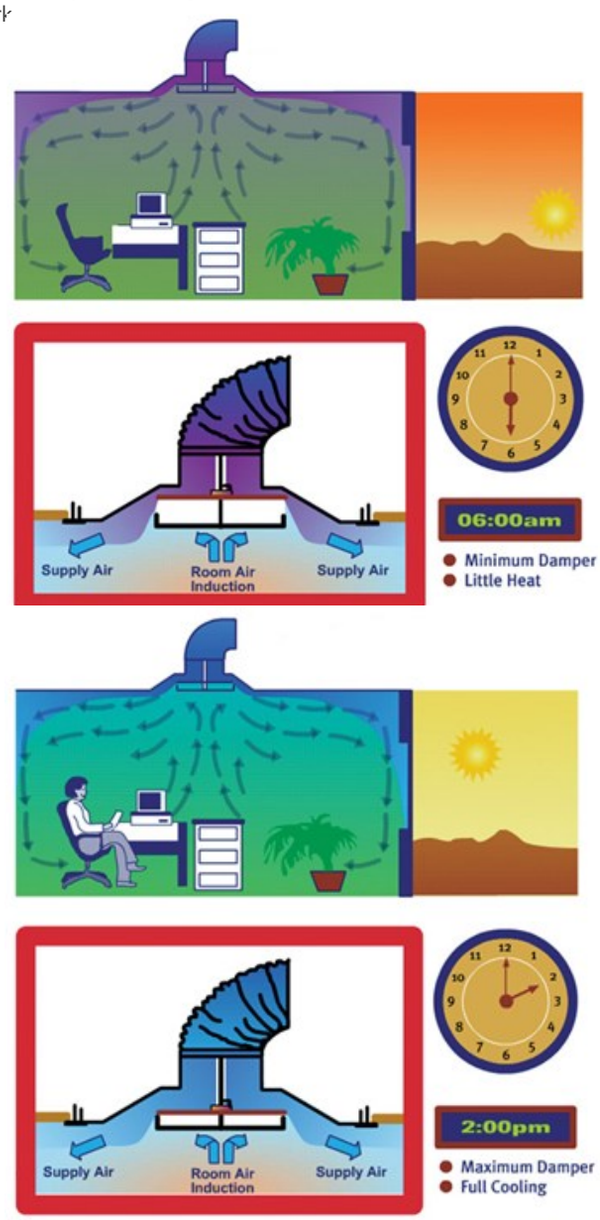

ENERGY SAVINGS

Green Building Benefits. Receive Management, Indoor Environmental Quality and Energy Efficiency Credits by using Rickard VAV Diffusers.

Rickard MLM+ controls use energy efficiently. Rickard MLM+ Diffusers use -2.4VA (24VDC 100mA) only when the motor is running. MLM24 Power Supply Units use - 66VA (220VAC .3A) or (115VAC .35A) max and can supply up to 15 diffusers. MLM+ Master Communications Units (MCU2) use - 10VA (24VAC .4A) max and can connect to 60 diffusers.

ONBOARD SENSING ACCURACY

Rickard Diffusers use innovative forced induction technology resulting in accurate room sensing and flexible zoning.

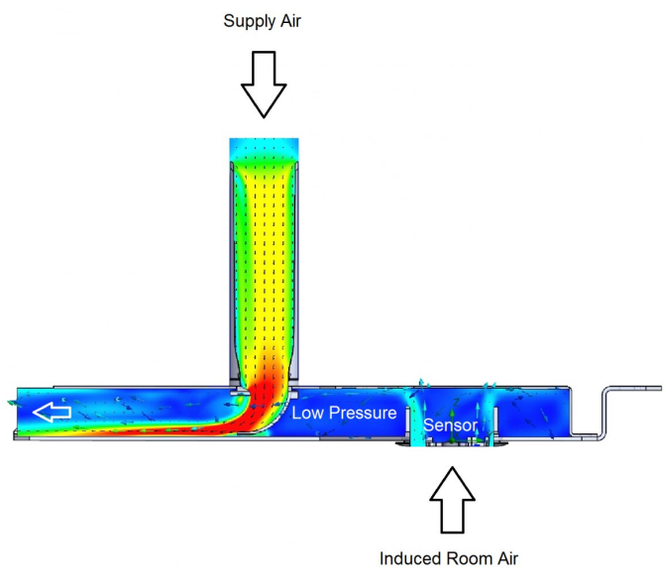

CONTROLS

STANDARD MLM+ CONTROLLER CAPABILITIES

Every VAV diffuser is fitted as **standard with on-board sensing and temperature controlling** functionality.

Fifteen diffusers can be daisy chained, using the supplied **INTER DIFFUSER CONNECTING CABLE,** to a PSU power Supply unit (purchased separately), ensure power and communication signal to each diffuser.

Every VAV diffuser will **AUTO COMMISSION** when powered up and will then operate as a stand-alone primary diffuser. Primary diffusers can be changed to Secondary diffusers, using the MLM+ application, when uniform control is required in one zone.

Every VAV diffuser is fitted as standard with an **OCCUPANCY SENSOR**. This sensor will automatically take the diffuser to minimum air when the room is not occupied after 15 minutes. The delay can be changed or switched off using the MLM+ application. It is also possible to program a secondary backup profile, taking the diffuser to fully closed after a further delay.

Electronically **adjusted maximum and minimum control disc limits** allow designed airflow volumes to be achieved.

Global manual commands (all diffusers can be driven open) reduce commissioning costs.

MLM+ OPTIONS

WALL THERMOSTATS can be added as an option to every VAV diffuser. When plugged into the diffuser interface on the back of the diffuser, the controls will automatically override the on-board master to provide sensing and setpoint adjustment on the wall.

INFRARED SENSOR AND ADJUSTER can be provided for setpoint adjustment.

REVERSE CHANGE OVER sensor can be provided as an option to ensure correct diffuser control when supply air changes from cooling to heating.

ELECTRIC HEATING can be provided as an option on each diffuser. The heater spigot can simply be plugged into the diffuser neck spigot and the control cable can be plugged into the heater socket on the diffuser interface module.

AIRFLOW MEASUREMENT module allows for simplified electronic commissioning and controlling of flow maximum & minimum volumes, independent of neck pressure.

Cost effective **BACnet BMS integration** is possible using the MCU interface. This module can connect to four power supplies, providing a cost effective BACnet link for up to 60 diffusers at a time.

CAPITAL AND OPERATING COSTS

Low diffuser height (100mm) can reduce a buildings overall cost by reducing the height of the ceiling void.

INSTALLATION AND SAVINGS

Included plastic packaging can be used to protect the tile once installed.

Light weight Diffuser. Tile can be installed separately if required.

Our diffuser range fits most ceiling styles.

MAINTENANCE

No regular maintenance is required.

Working components are all accessible from below the ceiling. No skilled labour or special tools are required.

Diffuser life cycle testing gives peace of mind far beyond our two year warranty period (Electronic diffuser range). Life cycle testing is based on 3000 operating hours and 4000 control cycles per year and is the equivalent of 15 years of service.

AESTHETICS

The Rickard range of ceiling diffusers offers a clean uncluttered look. The design hides the internals, is pressed to lie flush with the ceiling and comes in a range of colours and styles to satisfy different tastes.

WARRANTY

Rickard offers a 2 year manufacturer's warranty on its Electronic VAV diffusers. Please see Terms and Conditions for a full description of our Warranty.

SAFETY

Working plastic components are moulded in glass reinforced Makrolon - Makrolon is flame retardant and chlorine and bromine free when burnt. The Rickard Thermo-Disc and Electronic actuators are moulded in Makrolon and are UL Certified.

APPLICATION

VAV COOLING AND HEATING

VAV COOLING WITH TERMINAL REHEAT

The RICKARD VARIABLE GEOMETRY VARI-DISC CEILING DIFFUSER is designed for general building zones where uniform radial discharge is the most suitable and desirable supply air distribution pattern. The basic diffuser is available in a wide range of options to suit every individual requirement.

Optimum performance in terms of uniform air distribution and low noise levels have been combined with simple construction and aesthetically pleasing appearance to provide a unit which is both functional and reliable. All diffusers are of steel construction and are finished in a chip resistant baked epoxy coating which is available in a wide range of colours to suit architectural requirements.

OPERATION

TEMPERATURE CONTROL

Room temperature is controlled by varying the supply air volume in accordance with demand. Volume control is achieved by moving a disc, known as a control disc, vertically up and down within the diffuser so as to vary the aperture through which the air passes. This is effectively what constitutes the "VARIABLE GEOMETRY" concept which maintains acceptable air movement in the room throughout the range from 100% down to as little as 25%.

The position of the control disc is varied by means of an electric actuator which drives the control disc in response to a signal received from a temperature controller. When used in conjunction with one of the RICKARD controllers, the diffuser will control room temperature on a proportional/integral basis. Air is discharged in a horizontal 360º pattern. Used in conjunction with our MLM+ controls, maximum and minimum supply air volumes may be adjusted to suit the particular design conditions.

In some cases, extra heating may be required in a particularly cold office or corner of the building. In these cases top-up heaters are available. Rickard's top-up heaters are modular and are easily added to a diffuser to ensure an occupants comfort levels are satisfied.

SELECTION

GENERAL

The first consideration when designing a system is to calculate the required supply air volume and temperature to satisfy room conditions at maximum heat loads. It is recommended that ducting is sized using static regain design principles. Supply air velocities in branch ducts should be between 3.5 and 7.5m/s (650 and 1500ft/min).

THROW

This is the distance from the centre of the diffuser to the point at which the supply air velocity has reduced to 0.25m/s (50ft/min) when measured 25mm (1 inch) below the ceiling and the control disc is in the fully open position. Coning occurs when two airstreams travelling in opposite directions meet and result in a downward moving cone of air. A similar effect is experienced should a diffuser be positioned at a distance from the wall that is less than its throw. The air will strike the wall and flow in a downward direction such that the point at which the air reaches a velocity of 0.25m/s (50ft/min), the sum of the horizontal and vertical travel of the air is equal to the diffuser throw. Throw remains at acceptable levels throughout the range of air flows, a feature of the variable geometry VAV diffuser concept.

DETERMINING MAXIMUM CEILING HEIGHT

The drawing below describes how to determine the maximum ceiling height that can be achieved from a diffuser. Please see the diffuser performance data page for airflow, throw, noise and pressure information.

NOISE LEVEL REQUIREMENTS

The published diffuser noise level must be checked to ensure it is within the project specification. Published diffuser noise levels represent only the noise generated by the diffuser and do not take into consideration any duct-borne noise.

DUCT STATIC PRESSURE

Diffuser performance has been established using diffuser neck TOTAL pressure, although that which is normally known or measured is duct STATIC pressure. What happens between the duct and the diffuser depends on the length and type of flexible duct being used. For simplicity, it can be assumed that the duct STATIC pressure is approximately equal to the diffuser neck total pressure. This is a valid assumption for systems where flexible duct lengths are not excessive and can be explained briefly as follows:

The static pressure loss due to friction in the flexible duct (±10Pa or 0.04ins Wg) would normally be about the same as the velocity pressure in the neck of the diffuser and since total pressure is the sum of static and velocity pressure, we can say that neck total pressure is numerically approximately the same as duct static pressure. Although the tables reflect diffuser performance for neck total pressures ranging from 20-100Pa (0.04-0.40ins Wg), caution should be exercised when selecting diffusers outside the 40-80Pa (0.08-0.32ins Wg). At lower pressures air movement and induction may be insufficient and at higher pressures draughts and excessive noise may result. Best results are obtained when diffusers are selected at pressures of 40-60Pa (0.08-0.24ins Wg). Bear in mind that all diffusers served by a common duct will all operate at the same static pressure as controlled by the pressure control damper. Therefore diffusers which are able to supply more air than is necessary will be driven partially closed by the temperature controller and hence the system becomes self-balancing.

NOTE: Avoid upstream restrictions such as manually adjusted dampers or squashed flexible ducting. The reason being that at maximum flow any restrictions will result in a significant static pressure loss (which for some cases may be desirable) whereas at minimum flow conditions offer virtually no restriction, which will result in the static pressure at the diffuser being too high at minimum flow causing over-cooling/heating.

DETERMINING MAXIMUM CEILING HEIGHT

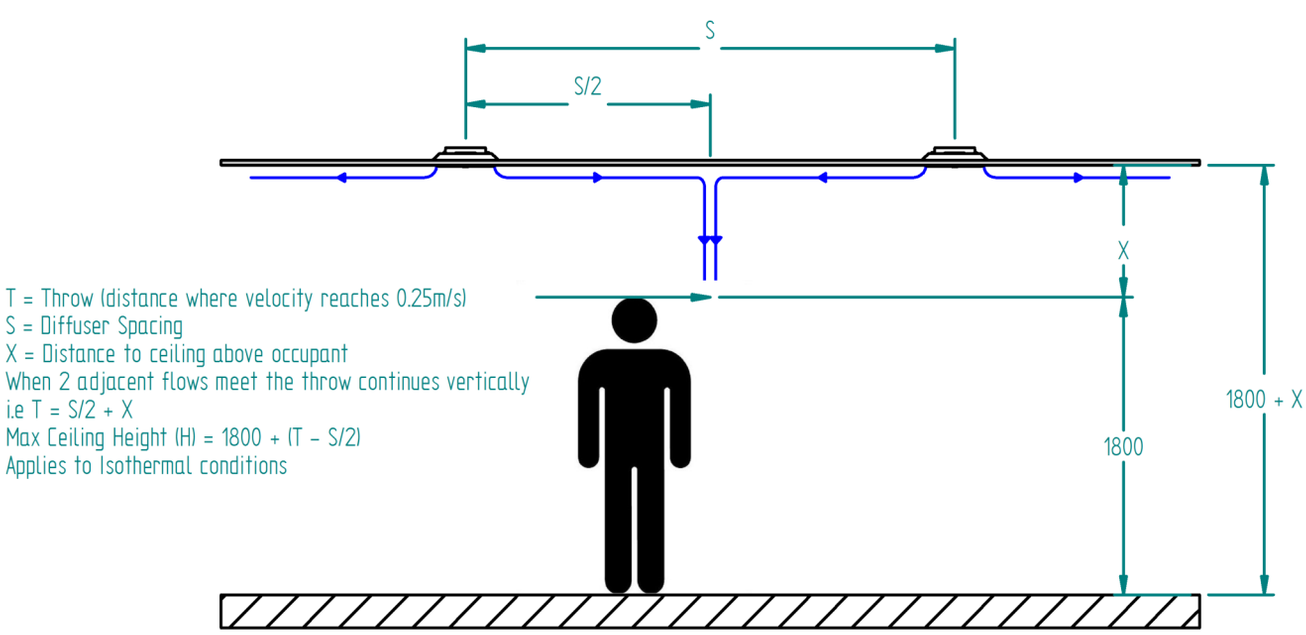

TYPES

VCD1 LARGE CONE *350mm only* *S595 & 603*	*VCD1 MEDIUM CONE* *150mm to 300mm* *S495, 595 & 603*
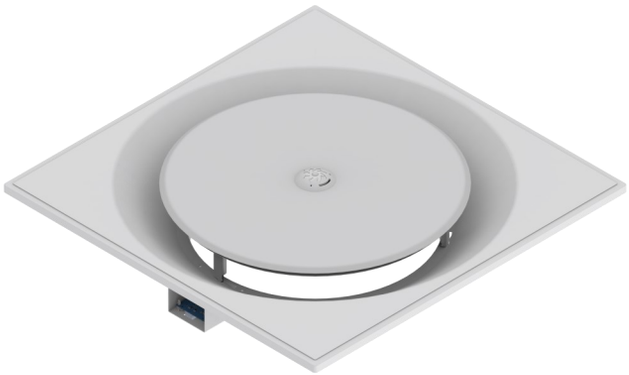	
VRD1 LARGE CONE *350mm only* *R580mm*	*VRD1 MEDIUM CONE* *150mm to 300mm* *R580mm*
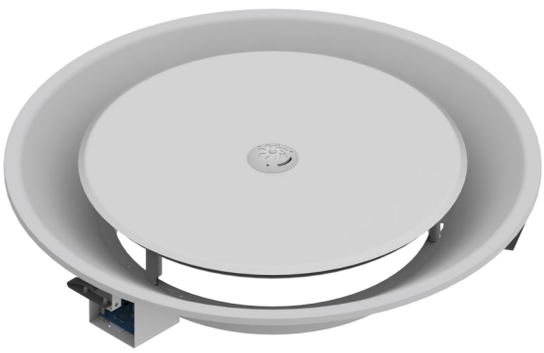	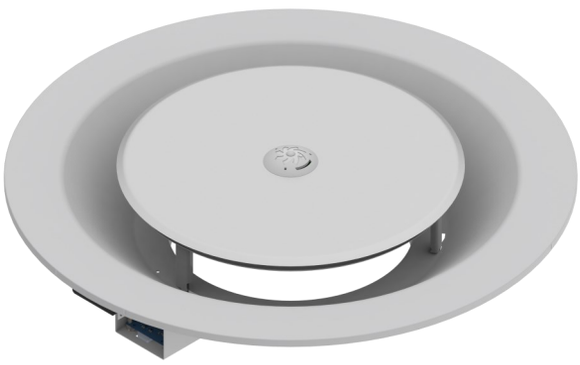
VSD1 LARGE CONE *150 to 350mm* *S595 & 603mm*	*VSD1 MEDIUM CONE* *150 to 300mm* *S495mm only*
	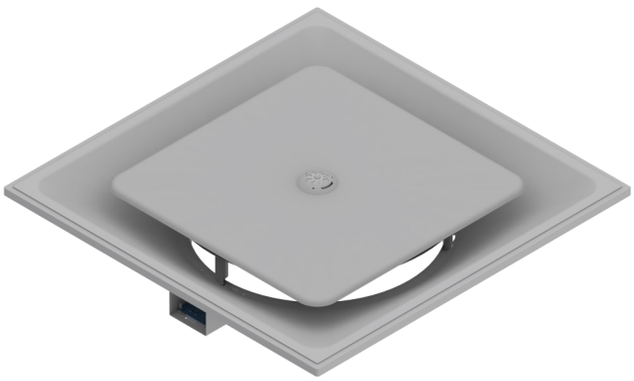

VCD, VRD1 150-300 (MEDIUM CONE, FLUSH TRIM)								
NECK SIZE (mm)	READING	NECK TOTAL PRESSURE (Pa)						
		10	20	30	40	50	60	70
150	FLOW (l/s)	45	64	78	90	101	111	120
	THROW (m)	1.9	2.4	2.8	3.0	3.2	3.3	3.4
	NC LEVEL	12	14	22	25	28	31	34
200	FLOW (l/s)	72	103	127	146	164	180	194
	THROW (m)	2.6	3.2	3.6	3.8	4.0	4.2	4.3
	NC LEVEL	12	15	19	23	27	30	33
250	FLOW (l/s)	98	139	171	198	222	245	264
	THROW (m)	3.0	3.6	4.0	4.3	4.5	4.6	4.8
	NC LEVEL	12	15	22	27	30	33	35
300	FLOW (l/s)	124	181	223	260	292	321	348
	THROW (m)	3.3	4.1	4.5	4.9	5.1	5.3	5.5
	NC LEVEL	13	21	28	32	36	38	41
VCD, VRD1 350 (LARGE CONE, PROUD TRIM)								
350	FLOW (l/s)	156	225	275	320	359	395	429
	THROW (m)	3.0	3.8	4.2	4.5	4.8	4.9	5.1
	NC LEVEL	15	18	24	28	31	34	36

VSD1 150-300 (LARGE CONE FLUSH TRIM)								
NECK SIZE (mm)	READING	NECK TOTAL PRESSURE (Pa)						
		10	20	30	40	50	60	70
150	FLOW (l/s)	43	61	75	87	98	107	116
	THROW (m)	1.6	2.2	2.5	2.8	3.0	3.1	3.3
	NC LEVEL	13	18	25	29	31	34	36
200	FLOW (l/s)	74	106	131	151	169	185	201
	THROW (m)	2.5	3.2	3.5	3.8	4.0	4.1	4.3
	NC LEVEL	12	18	25	29	32	35	37
250	FLOW (l/s)	99	143	177	205	230	251	274
	THROW (m)	3.4	4.1	4.5	4.8	5.1	5.3	5.4
	NC LEVEL	14	19	25	29	33	35	38
300	FLOW (l/s)	112	160	197	228	259	280	305
	THROW (m)	3.5	4.2	4.6	4.9	5.1	5.3	5.5
	NC LEVEL	13	17	24	28	31	34	36
VSD1 350 (LARGE CONE PROUD TRIM)								
350	FLOW (l/s)	182	261	317	366	411	451	488
	THROW (m)	2.8	3.7	4.2	4.6	4.8	5.1	5.3
	NC LEVEL	12	21	26	30	34	36	38

GREEN BUILDING BENEFITS

INTRODUCTION

There is an increased focus on green in modern buildings, and a focus to improve the green rating of existing buildings.

This section highlights how Rickard product may help to get a building project certified as green.

Rickard low pressure VAV diffusers can have an impact the following green credits

- Management credits
- Indoor Environmental Quality credits
- Energy credits

MANAGEMENT CREDITS

BUILDING TUNING

Diffusers are self balancing, and fine-tune air delivery to the precise needs of the office.

This is achieved through the modulation of a diffuser control disc that is activated by electronic controls to ensure that the correct amount of air is released into the room thereby controlling room conditions.

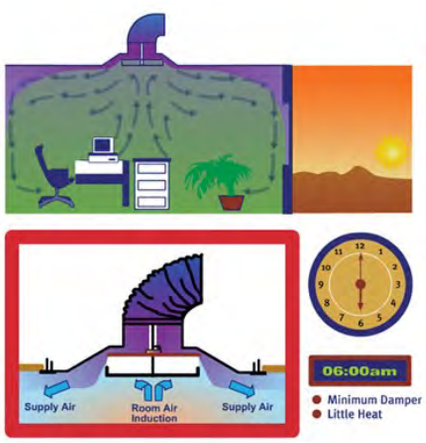

COMMISSIONING

Since these diffusers are essentially self balancing, there is no need to balance the airflow to every variable geometry diffuser. The commissioning engineer need only ensure that the diffuser most likely to be starved from air, typically at the end of the run, has enough air at maximum load conditions.

INFORMATION MANAGEMENT

Modern BMS compatible VAV diffuser controls allow for intelligent building and central plant decisions based on information available from every diffuser. Building conditions can be controlled and modified centrally. See MLM controls booklet for more information.

INDOOR ENVIRONMENTAL QUALITY CREDITS

INDIVIDUAL COMFORT CONTROL

Every Variable Geometry VAV diffuser can individually control conditions in the occupied space where it is fitted. Every diffuser can be fitted with an on-board space sensor, or a Wall mounted space sensor with set point adjustment capabilities.

THERMAL COMFORT

Compliance with Ashrae 55-1992 is possible when using VAV diffusers. A VAV Diffuser is the only HVAC product that directly effects comfort.

AIR CHANGE EFFECTIVENESS

Rickard VAV diffusers will ensure that air is mixed effectively in the occupied space even when supplying Minimum Air volumes

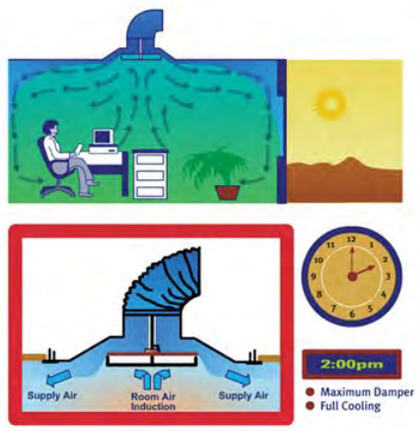

ENERGY CREDITS

ENERGY IMPROVEMENT

Low Pressure VAV diffusers save energy due to the following benefits:

- Rickard VAV diffusers eliminate the pressure drop associated with VAV boxes required in a VAV box variable volume air supply system. This result in a central plant that use less Fan energy.
- Rickard VAV diffusers save energy since no area in the building is over cooled, or over heated. Every diffuser measures local space conditions and varies the amount of air to meet the demands of that area.
- Rickard VAV diffusers with occupancy sensors ensure that only occupied spaces are supplied with air. This can save a huge amount of fan energy since only 50% to 70% of space, depending on the type of building, is occupied at any one time during business hours.

ELECTRICAL AND TENANCY SUB-METERING

Sub-metering can be achieved because Rickard Controls and Neck Heaters are powered via separate circuits.

PEAK ENERGY DEMAND REDUCTION

Heating on different diffusers can be staggered to reduce total building peak demand.

Heater output can be limited per zone or per diffuser to reduce power requirements during peak demand periods.

THROW AND EXIT VELOCITY

It is a feature of the variable geometry VAV diffuser concept to maintain throw at an acceptable level throughout the range of air flows. This is achieved by changing the exit geometry for reduced airflow, This maintains the exit velocity, which in return will maintain the throw. Throw is the distance from the diffuser at which the air velocity drops below 0.25 m/s.

If air velocity is too high in the occupied space, drafts will be experienced and ADPI values will suffer.

VAV diffusers rely on a high velocity air stream to maintain coanda and throw next to the ceiling. Care must be taken to select the correct diffuser for the size of the space and to meet load requirements.

Correctly selected diffusers allow for effective room air circulation without drafts as shown in the CFD analysis below.

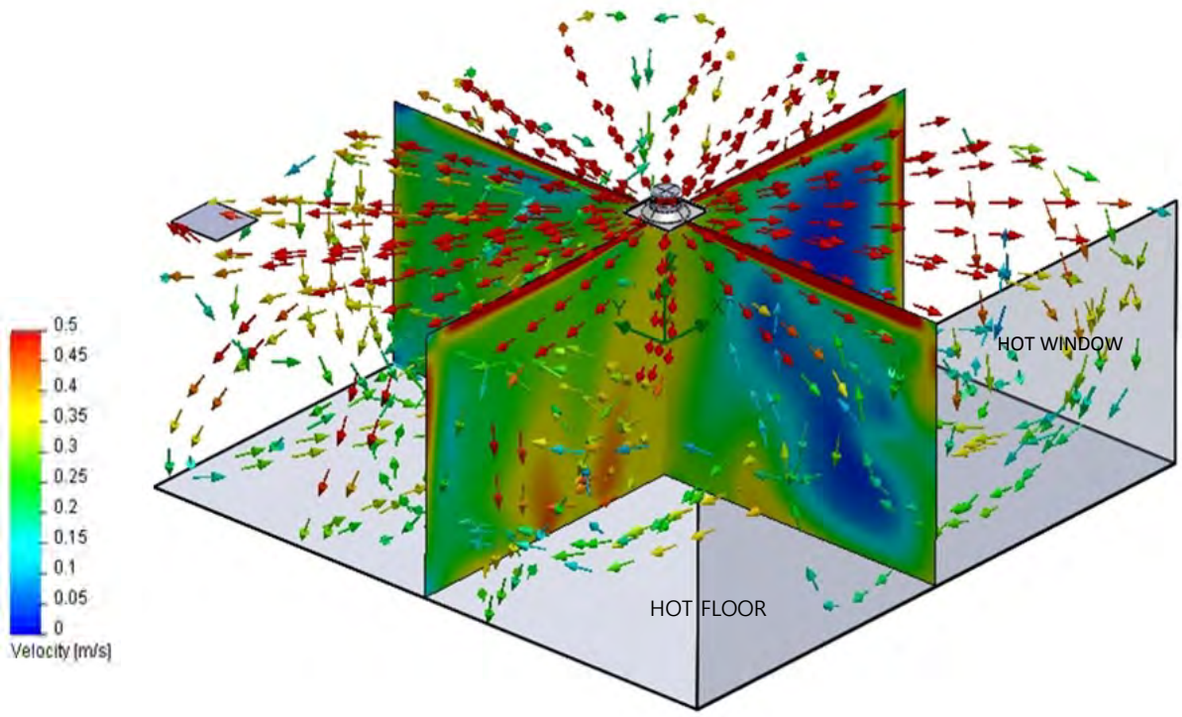

VELOCITY VECTOR PLOT (VCD 300mm; Control Disc 30% open; Supply 12°C; Room 7m x 7m)

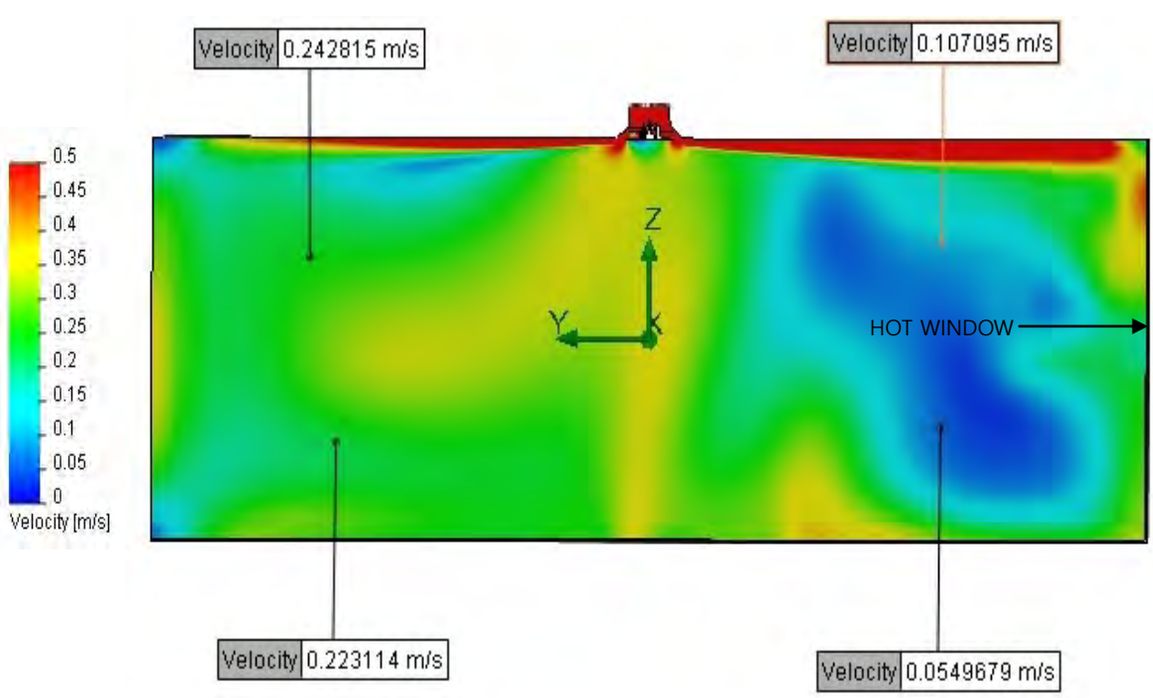

VELOCITY VECTOR PLOT (VCD 300mm; Control Disc 30% open; Supply 12°C; Room 7m x 7m)

AIR CHANGE EFFECTIVENESS

Air Change Effectiveness (ACE), is defined as the age of air that would occur throughout the room if the air was perfectly mixed, divided by the average age of the air that occupants would inhale.

An Air Change Effectiveness of 1 indicates perfect uniform mixing in the room. If ACE is lower than 1, it is an indication that the air is short-circuiting between the supply air diffuser and the return air grill.

An ACE value of higher than 1 is possible when air diffusion allows a higher ventilation rate in the occupied space than in the rest of the room.

Low Pressure VAV diffusers maintain acceptable Air Change Effectiveness values even when turned down to minimum supply air volumes.

The CFD clip below gives an representation of the Mean Age of the Air throughout a typical room that is fitted with a Variable Geometry VAV diffuser.

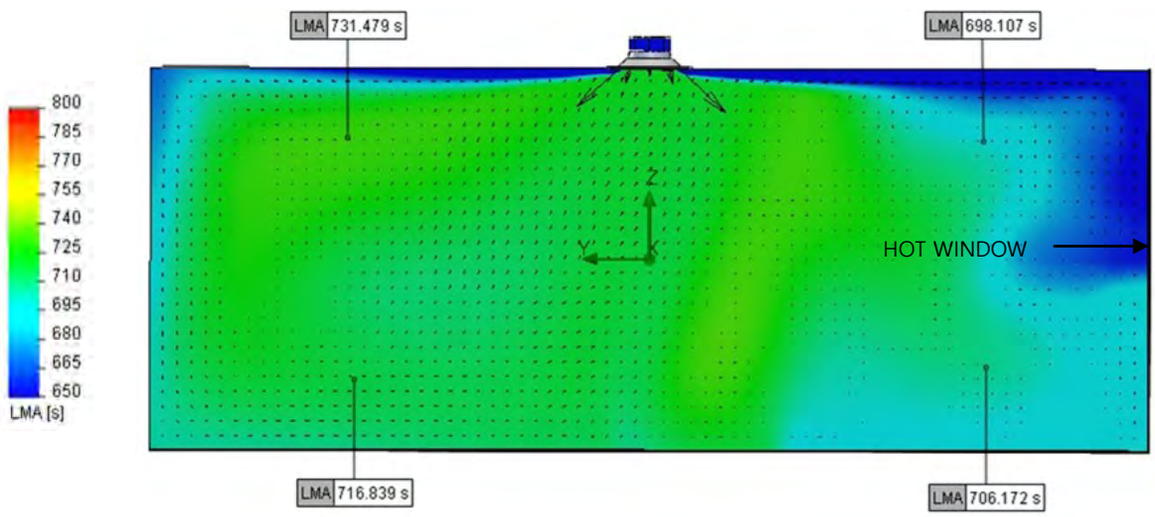

LOCAL MEAN AGE OF AIR (VCD 300mm; Control disc 30% open; Supply 12°C; Room 7m x 7m)

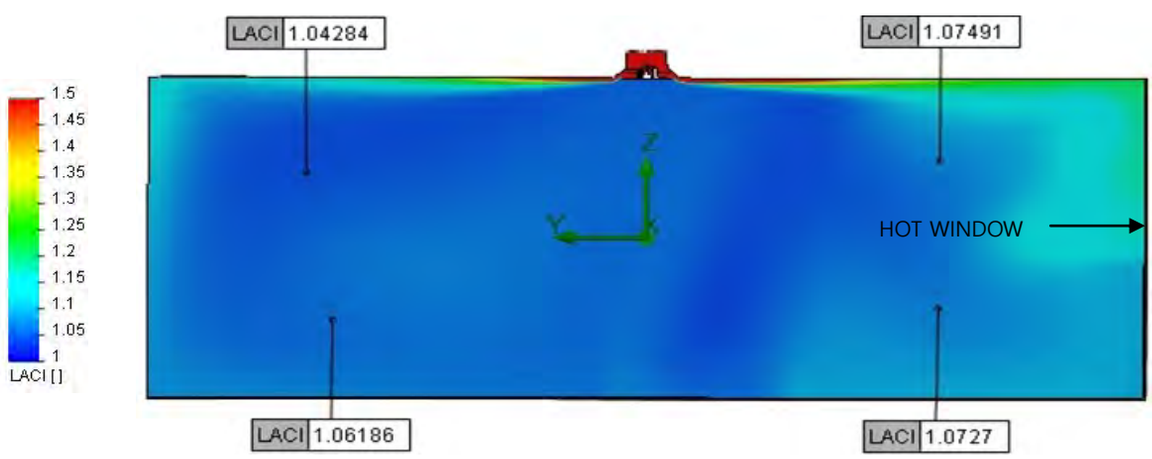

LOCAL AIR CHANGE INDEX (VCD 300mm; Control Disc 30% open; Supply 12°C; Room 7m x 7m)

LACI close to 1 indicates acceptable room air mixing

LACI = LMA/time taken to fill room with air

ADPI PERFORMANCE

Air Diffusion Performance Index (ADPI) statistically relates the air temperature and air speed in the occupied space to the occupants' thermal comfort.

ADPI is calculated as the percentage of locations in the conditioned space that meet comfort standards.

The "2009 Ashrae Handbook: Fundamentals" indicates that conditions in the occupied space is acceptable when:

- the air velocity is below 0.35 m/s
- the effective draft temperature is larger than –1.5 and smaller than 1. The effective draft temperature is calculated around setpoint. (Tc is 22°C in the plot below)
- the Draft Rating is smaller than 20. The Draft Rating is the number of people that would be uncomfortable due to draft.

Rickard VAV diffusers that are correctly selected for the size of the occupied space and the load in the occupied space, will maintain goof ADPI values throughout the range of control disc movement.

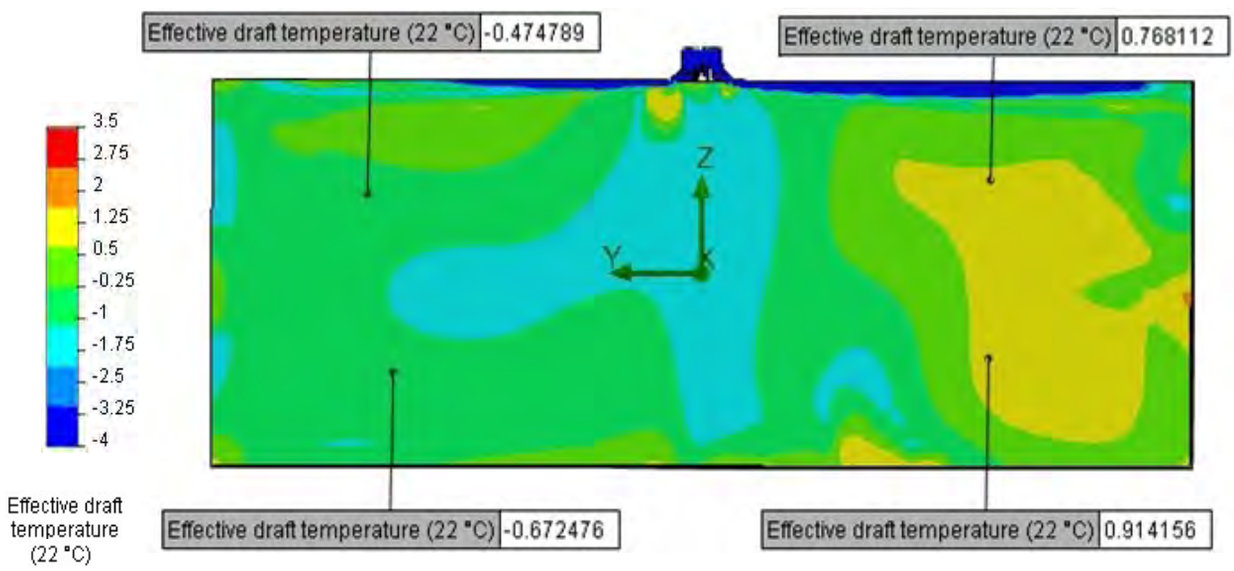

EFFECTIVE DRAFT TEMPERATURE (VCD 300mm; Control Disc 30% open; Supply 12°C; Room 7m x 7m)

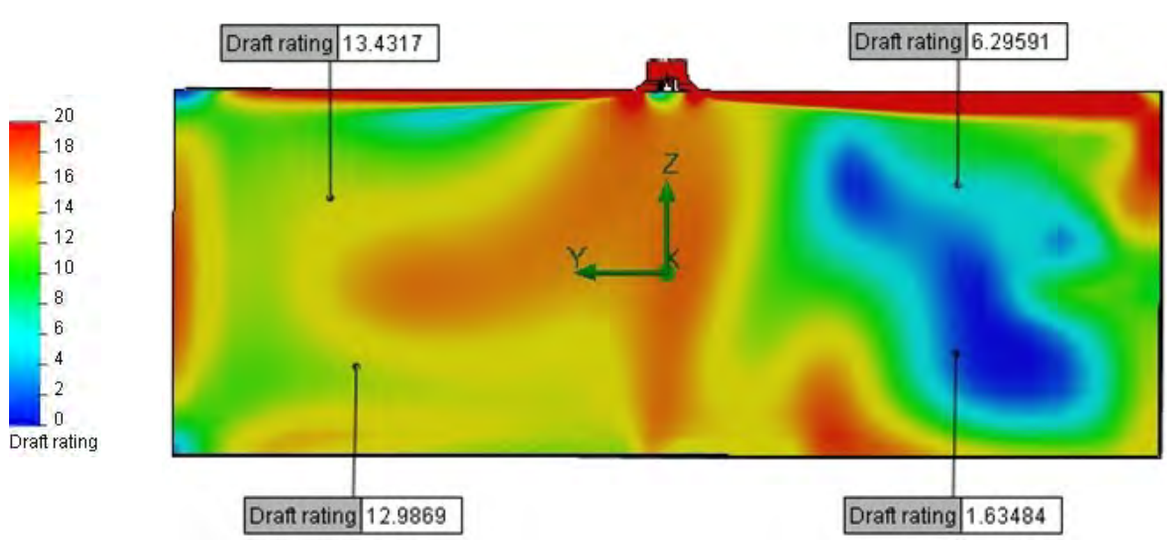

DRAFT RATING (VCD 300mm; Control Disc 30% open; Supply 12°C; Room 7m x 7m)

OPTIONS

The Rickard Ceiling Diffuser Range supports a wide range of diffusion unit styles.

EXPOSED TEE CEILING GRID

1. SQUARE DIFFUSER
   i. Drop-in Flush Mounting
   ii. Drop-in Shadow Line

The basic diffuser usually drops into a square opening between ceiling tees. Flush Mounting and Shadow Line styles are available. These can be supplied with the following mounting plate sizes, 495x495mm, 595x595mm & 23¾x23¾" to suit 500x500mm, 600x600mm & 24x24" ceiling grids respectively. Specials sizes are available on request.

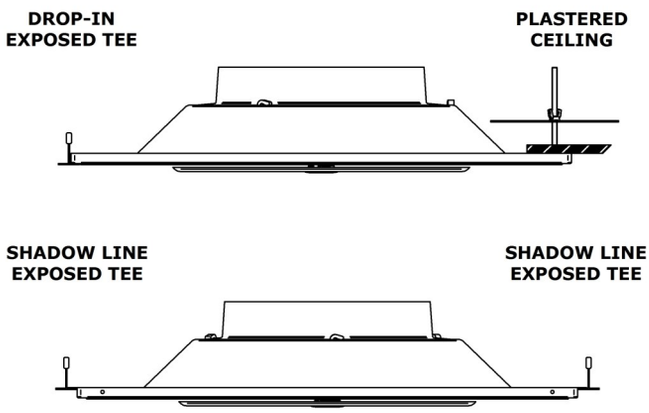

BAFFLED CEILING OR MOUNTING IN FREE SPACE

1. SQUARE DIFFUSER
   i. 4 Point Fixing (4 Brackets for threaded rod connection)
2. ROUND DIFFUSER
   i. 3 Point Fixing (3 Brackets for threaded rod connection)
   ii. Hard Duct Connection (no accessories required)

Baffled ceilings require an unusual treatment which is not illustrated. Normally this ceiling requires a square tile with suspension points fitted at each corner thereby enabling support from the top edges of the baffles. Large diffuser mounting plates are particularly beneficial in the baffled ceiling as there is otherwise little opportunity for the Coanda effect to help distribute conditioned air across the ceiling. This may result in inadequate throws and poor room air movement.

PLASTERED CEILING

1. SQUARE DIFFUSER
   i. 4 Point Fixing (4 Brackets with Backing Plates)
   ii. T-Frame (Square Frame to allow Drop-in Flush Mounting)

In the case of mounting square diffusers into plastered ceilings, two methods of fixing may be used. Concealed fixing is achieved by four fixing studs secured in the corners of the mounting plate. These pass through the ceiling and, with the use of backing plates, are used to secure the diffuser to the ceiling. A further option for fixing into a plastered ceiling is with the use of a T-frame which is an optional extra. This is fixed to the ceiling and the diffuser then drops into it.

4 POINT FIXING (4 BRACKETS WITH BACKING PLATES)

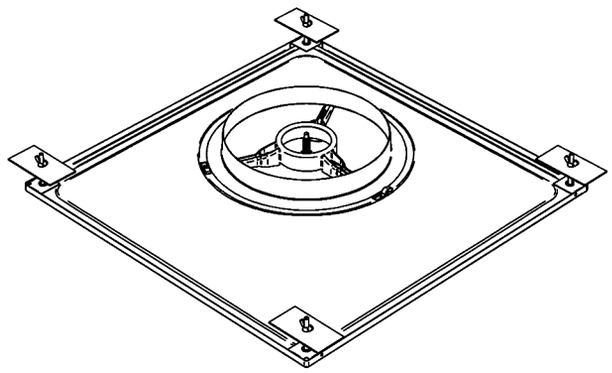

T-FRAME (DROP-IN MOUNTING FOR PLASTERED CEILINGS)

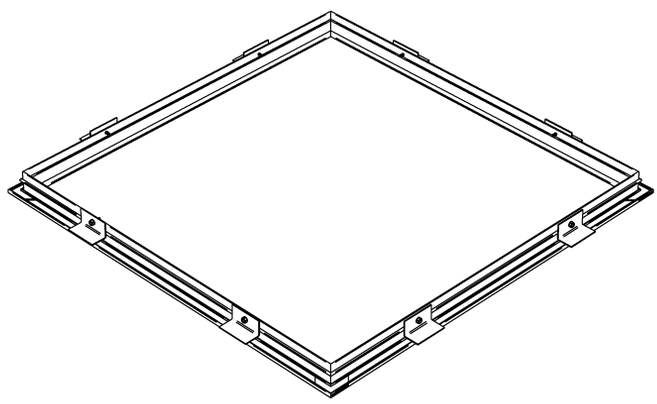

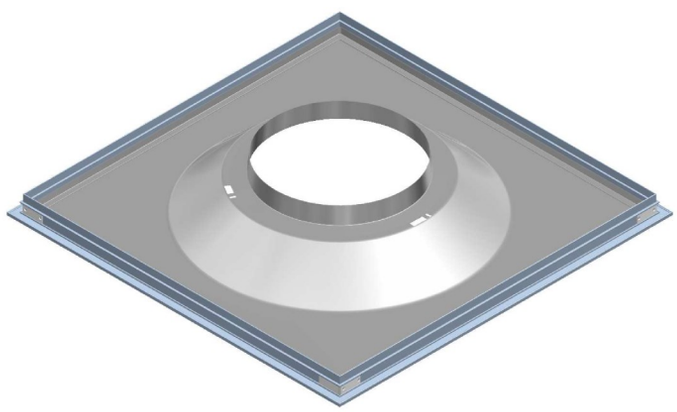

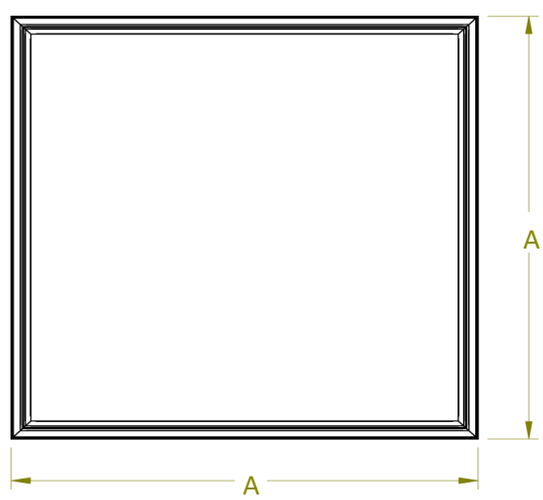

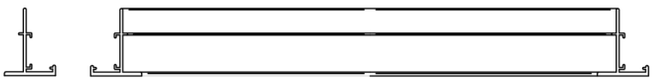

Tile Size (mm)	A (mm)
320 x 320	361
495 x 495	536
550 x 550	591
595 x 595	636
603 x 603	644
845 x 845	886

Tile Size (mm)	Ceiling Hole Dimensions (mm)
320 x 320	342 x 342
495 x 495	517 x 517
550 x 550	572 x 572
595 x 595	615 x 615
603 x 603	625 x 625
845 x 845	867 x 867

2. ROUND DIFFUSER

i. 3 Point Fixing (3 Brackets to allow Bayonet attachment)

Apart from the usual four-corner style, the Rickard Ceiling Diffuser is also available in a circular format. This model is most often combined with round down-lighters to preserve the circular pattern, and in particular with plastered ceilings. It also offers the absolute minimum interruption to the ceiling for those who prefer to have its unbroken regularity maintained.

Fixing of round diffusers in a plastered ceiling often presents a problem because of restricted access to the ceiling void. This problem is overcome with a diffuser that is fitted with three clips that allows the Diffuser to be twisted and clipped into a hole created in the ceiling. The installer need only cut a round hole with three notches (stencils provided with each order) and the diffuser twisted into place. Removal is as easy, a simple twist in the opposite direction and the round diffuser can be removed. The entire operation can be carried out without ever needing to enter the ceiling space.

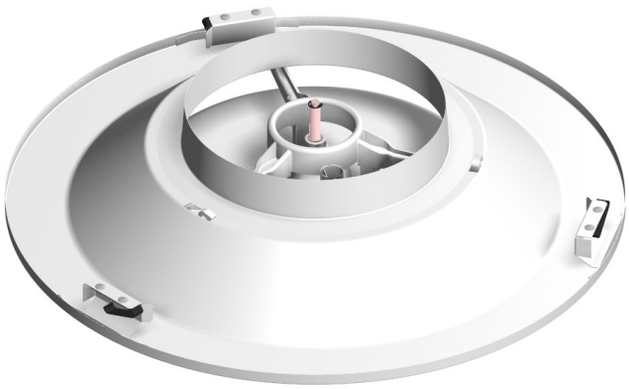

PLASTERED CEILING CUT-OUT DETAIL FOR ROUND DIFFUSERS

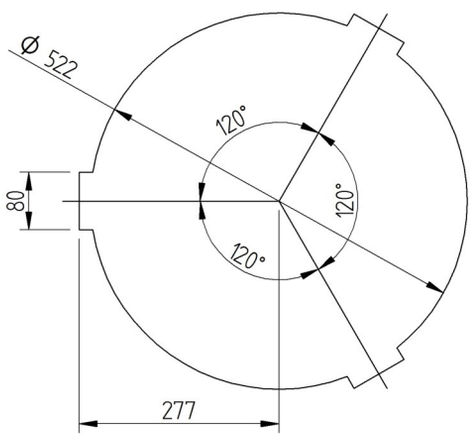

ii. T-Ring (Circular Frame to allow Drop-in Flush Mounting)

Alternatively a T-Ring that provides a circular frame for the diffuser to drop into can be fitted. Rickard offers two types: a screw pin type that uses 4 brackets to clamp it to the ceiling and a more affordable tab type that uses 6 tabs that can be folded over to secure the frame. Both use the same pressed ring as the face of the ring.

T-RING (4 Pin Screw Type)

DROP-IN MOUNTING FOR PLASTERED CEILINGS

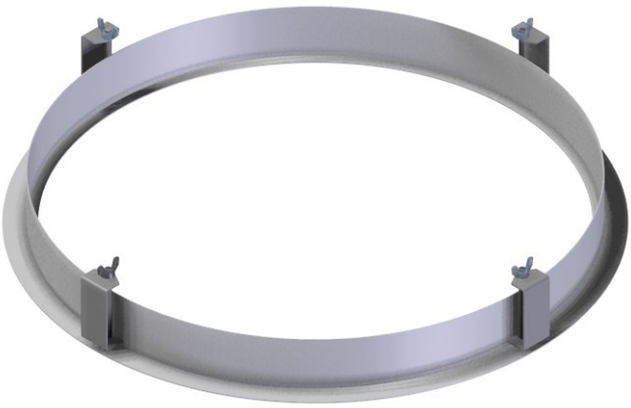

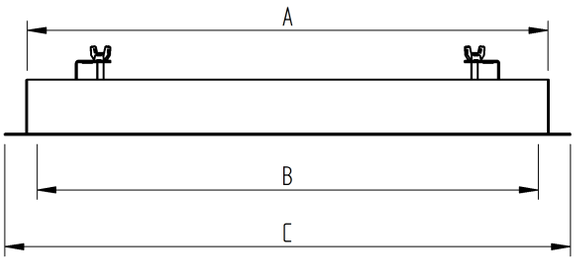

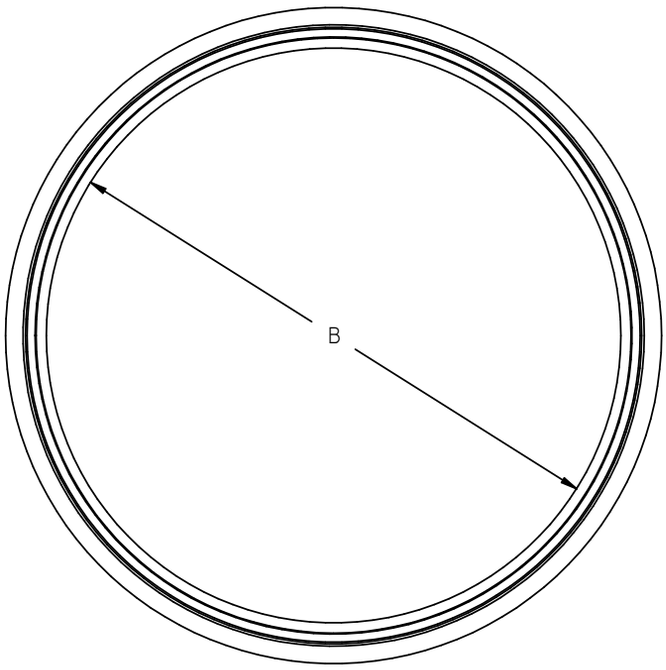

T-RING GENERAL DIMENSIONS					
NOMINAL SIZE	A	B	C	DIFFUSER DIAMETER	CUT-OUT SIZE
580	585	565	645	580	600

T-RING (Fold-Over Tab Type)

DROP-IN MOUNTING FOR PLASTERED CEILINGS

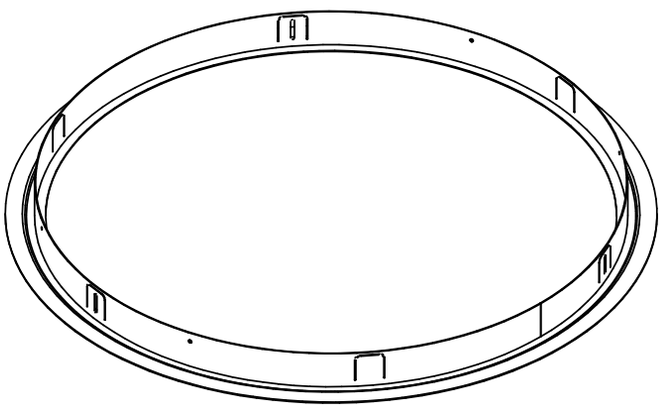

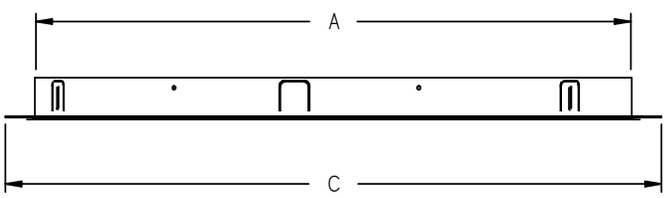

CEILING DIFFUSER GENERAL DIMENSIONS

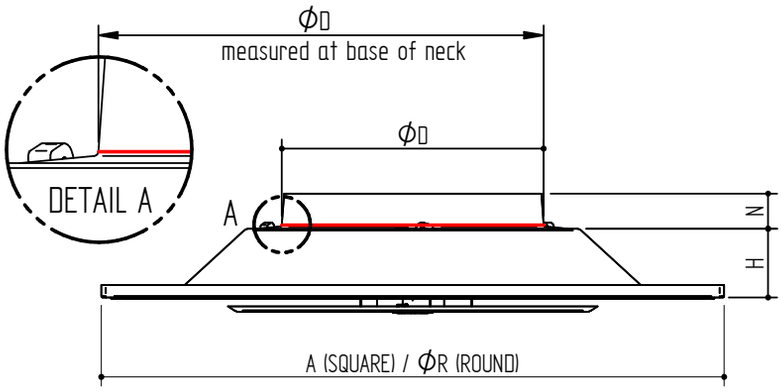

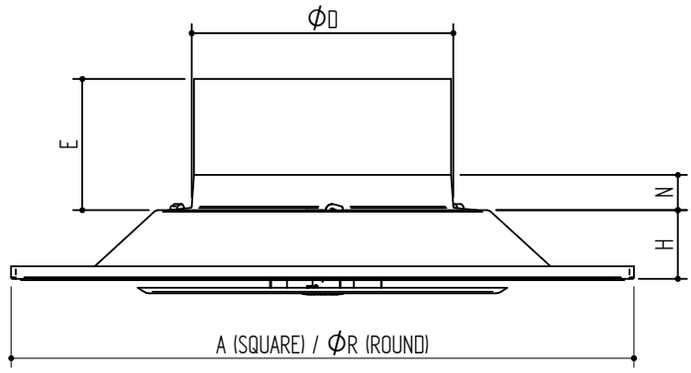

Nominal Size	Dimensions (mm)									
	Ø D Measured at base of neck	A	H	N	Ø R	E				
						Heater	Airflow Sensor	Airflow Switch	Neck Extension	Thermal Neck
150	153	495 x 495	74	26	580	125	116 to 130	132	95	130
		595 x 595								
200	200	495 x 495	71	32						
		595 x 595								
250	250	495 x 495	66	32						
		595 x 595								
300	293	495 x 495	65	35						
		595 x 595								
350	346	595 x 595	63	40						

CEILING DIFFUSER WITH PLENUM GENERAL DIMENSIONS

(Used when ceiling space is limited)

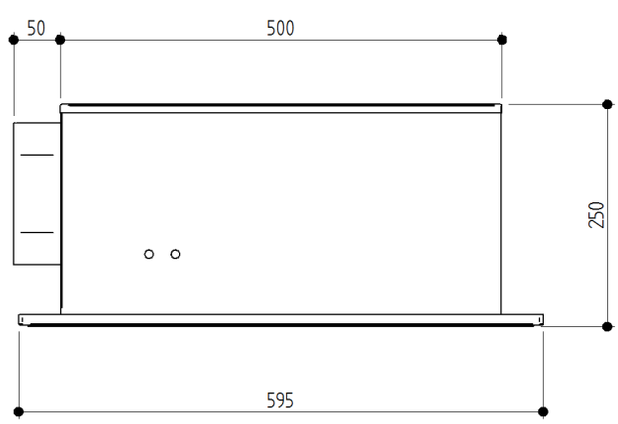

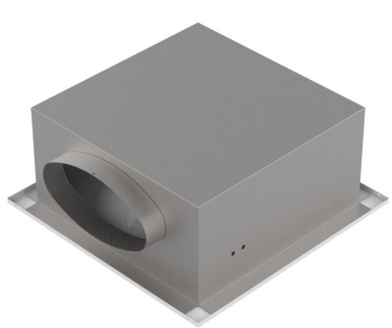

Note: Plenums create a significant pressure drop

(Performance data will not apply)

CEILING DIFFUSER MOUNTING METHODS

Diffuser Style				Ceiling Diffuser Mounting Types							
				Exposed Tee		Baffled Ceiling		Plastered Ceiling Surface Mounting			
Model	Diffuser Shape	Diffuser Size	Neck Size	Drop-in Flush Mounting	Drop-in Shadow Line	4 Point Fixing Brackets	3 Point Fixing Brackets	4 Point Fixing & Backing Plate	3 Point Bayonet Fixing	T-Frame	T-Ring
CCD3/CACD3 MC VCD1/4/5 MC	Square	495x495	150-300	•	○	•	○	•	○	•	○
	Square	595x595	150-300	•	•	•	○	•	○	•	○
	Square	23¾"x23¾"	6-12"	•	•	•	○	•	○	•	○
CCD3/CACD3 LC VCD1 LC	Square	595x595	350	•	○	•	○	•	○	•	○
	Square	23¾"x23¾"	14"	•	○	•	○	•	○	•	○
CSD3/CASD3 SC VSD1/4/5 SC	Square	320x320	150	•	○	•	○	•	○	•	○
CSD3/CASD3 LC VSD1 LC	Square	595x595	150-350	•	○	•	○	•	○	•	○
	Square	23¾"x23¾"	6-14"	•	○	•	○	•	○	•	○
VSD4/5 LC	Square	595x595	150-300	•	○	•	○	•	○	•	○
	Square	23¾"x23¾"	6-12"	•	○	•	○	•	○	•	○
CRD3/CARD3 VRD1/4/5	Round	580	150-300	○	○	○	•	○	•	○	•
CRD3/CARD3 LC VRD1 LC	Round	580	350	○	○	○	•	○	•	○	•

Ceiling Diffuser Naming Convention													
C	**V**	**C**	**R**	**S**	**D**	**W**	**1**	**3**	**4**	**5**	**SC**	**MC**	**LC**
Constant / Variable Volume		Trim Plate			Diffuser Type		Actuator Type				Cone Size		
Constant	Variable	Round	Round	Square	Diffuser	Swirl	Electronic	Manual	Thermal Cooling Only	Thermal Heating & Cooling	Small Cone	Medium Cone	Large Cone
		Back-pan Shape											
		Square	Round	Square									

e.g. VCD1 MC

C	**V**	**C**	**R**	**S**	**D**	**W**	**1**	**3**	**4**	**5**	**SC**	**MC**	**LC**
Constant / Variable Volume		Trim and Cone Shape			Diffuser Type		Actuator Type				Cone Size		
Constant	Variable	Round	Round	Square	Diffuser	Swirl	Electronic	Manual	Thermal Cooling Only	Thermal Heating & Cooling	Small Cone	Medium Cone	Large Cone
		Outside Back-pan Shape											
		Square	Round	Square									

V	**C**	**D**	**1**	**MC**
Variable Volume	Round Trim Plate Square Back-pan	Diffuser	Electronic	Medium Cone

Electronic Variable Volume Diffuser with Square Back-pan, Round Medium Cone Trim and Cone

GENERAL

Rickard Diffusers can be fitted with Supply Air Sensors to measure the Temperature of the air supplied from the Air Handling Unit.

Rickard Controls Algorithm will ensure cooling and heating of the occupied space is maximized depending on the temperature of supply air.

The sensor is also called a Change-over sensor, since it can change the direction of control disc operation to maximize cooling or heating performance.

OPERATION

There are four Change Over modes that can be selected:

Default: Change between cold and hot supply mode when Supply Air reaches Room temp +/- 1°C band.

At Setpoint: Change between cold and hot supply mode when Supply Air reaches Setpoint +/- 1°C band.

At Fixed Value: Change between cold and hot supply mode when Supply Air reaches the Fixed Value chosen +/- 1°C band.

Heater Control: Change between cold and hot supply mode when Supply Air reaches the Fixed Value chosen +/- 1°C band.

The diffuser will keep the heater on even when the control disc opens towards fully open.

SETTINGS

Activate Change Over functionality under the OnBoardMaster/ Process/Master Command tag. When selected, the CO sensor value will be displayed in bold. **ONLY ACTIVATE ON ONE MASTER PER ZONE**

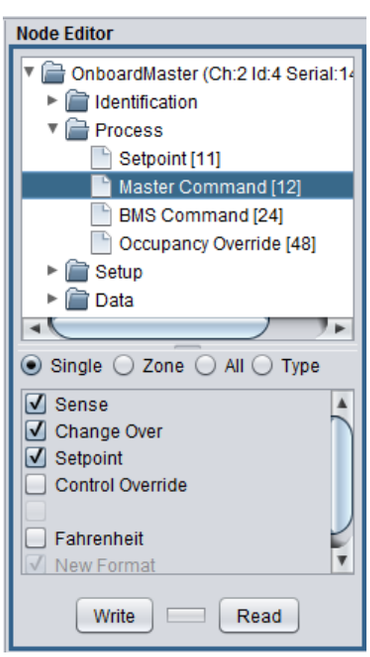

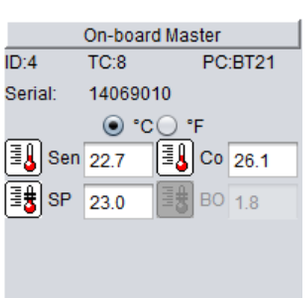

Activate Change Over mode under the Diffuser/Setup/Change Over Mode tag.

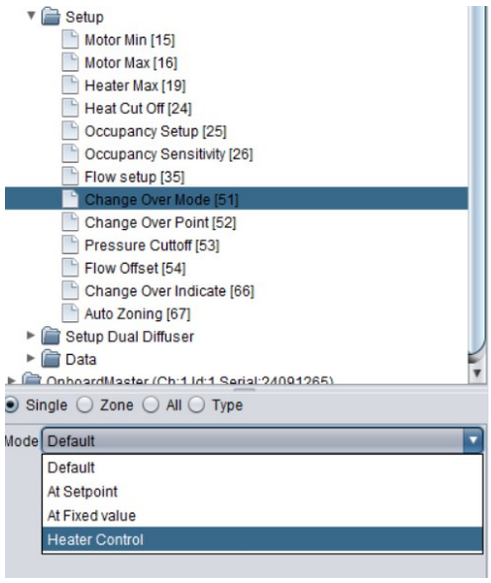

Enter Fixed Value Change Over Point under the Diffuser/Setup/ Change Over Point tag.

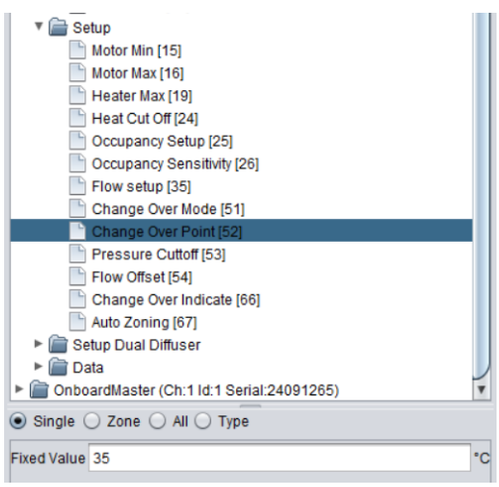

Changeover Band can be modified under the Diffuser/Setup/Change Over Indicate tag.

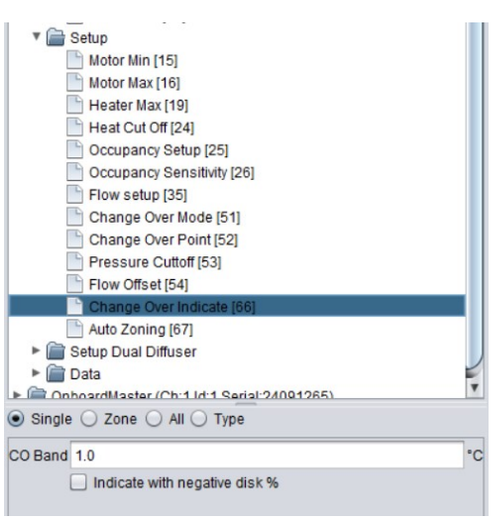

INSTALLATION

Converting a standard RICKARD master diffuser to incorporate changeover functionality is as simple as plugging in the supply air/ changeover temperature sensor and activating it using the software. Every master controller is pre-activated. This temperature sensor must be fitted in such a way that it senses the primary air temperature being supplied to the diffuser.

NOTE: Slave diffusers receive a control signal from the master diffuser and therefore do not require nor should they be fitted with a changeover sensor. It is also important that a slaves changeover sensing is turned off on the MLM application. Failure to do so will result in a zone not operating correctly. Only one changeover sensor should be activated per zone i.e. the master.

VCD1 Shown. Use the same connector on other models.

If a re-heater is fitted to the neck of the diffuser, care must be taken to ensure that, the changeover sensor is installed in such a way that it is not affected by radiant heat from the heater. Every changeover sensor is labeled "Please install supply air sensor max distance from diffuser" to ensure this.

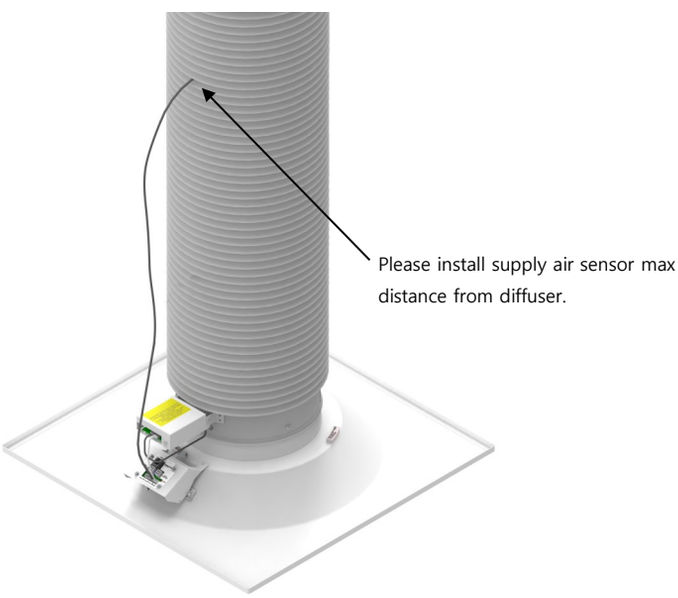

VCD1 Shown. Always locate sensor away from heater when fitting to other models.

The controller compares the primary air and room temperature. Whenever the supply air temperature exceeds the room temperature by one degree Celsius, the control action is reversed and switches to heating mode. Cooling mode is re-instated when the primary air temperature falls one degree Celsius below room temperature.

ENERGY EFFICIENCY

Should a VAV air diffusion unit be fitted with a re-heater, the heater will be proportionally energized between 0.5°C and 1.5°C below set-point temperature, regardless of which mode the controller is in. Effectively, a re-heater will only be energized at Minimum Supply Air Status when cold air is supplied from the AHU and at Maximum Supply Air Status when in Heating Change Over mode. This control logic is extremely energy efficient from a Green Building perspective.

FEATURES

FORM FACTOR

RICKARD diffusers are fitted with electric re-heaters that are either housed in a modular sleeve (VCD1, VSD1, CCD3, CSD3, VSW1, CSW, WBD's , CLN's and VLN's) or fitted directly to the unit (WBD, VLN). The heaters are energised when additional heating is required in a room.

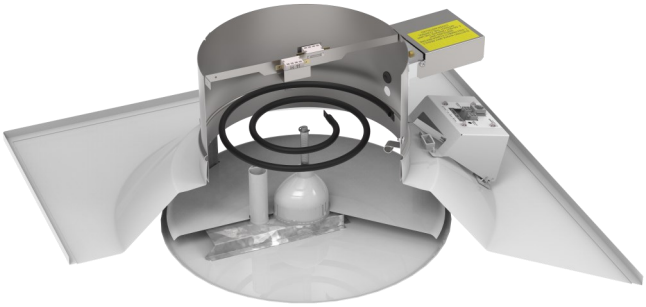

VAV PLATE DIFFUSER FITTED WITH MODULAR HEATER SPIGOT

WBD WITH DEDICATED HEATER FITTED

Electric heating can be considered to save energy when they are used to heat isolated offices that wouldn't be efficiently heated by raising the central plants temperature. The most efficient scenario in heating is for the central plant to supply sufficient heated air to allow most of the zones to be in control when the diffusers damper is close to minimum position. Zones that are colder are controlled by the diffuser opening further. Zones that cannot be satisfied by the diffuser supplying warm air at full volume are toped up with supplementary heating.

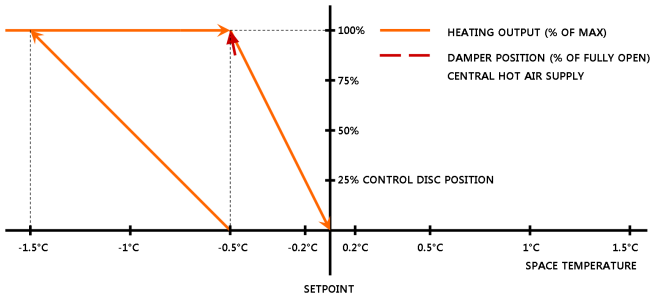

The most efficient scenario in cooling is for the central plant to supply sufficient cool air to allow most of the zones to be in control when the diffuser dampers are close to minimum position. Zones that are warmer can be controlled by the diffuser opening further. Zones that cannot be warmed sufficiently by reducing the cold air supply can be controlled by heating this reduced volume of air.

If the room temperature were to fall by 0.5°C below set point, the triac controller will commence energizing the heater proportionally and will fully energize the heater when the room temperature is approximately 1.5°C below set point.

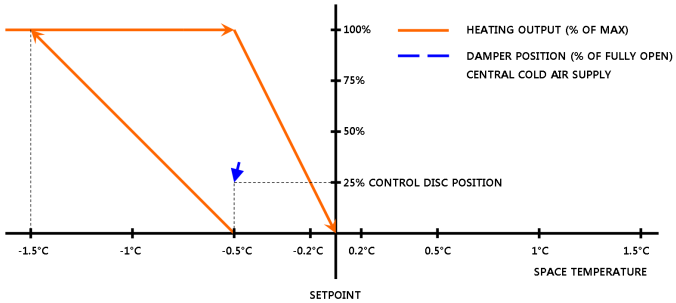

To ensure a building is efficiently heated it is necessary to integrate the Rickard VAV diffuser system with the central plant BMS. This is possible by using Rickard's MLM BMS Compatible Controls.

PROPORTIONAL HEATING

For accurate control of room temperature, the electric re-heater is controlled on a step-less, proportional basis. In addition to having a proportional output signal for cooling control, the temperature controller also has a proportional output signal for heating.

This is done by means of a triac switching set (current valve) which varies the heater output capacity by cycling the power supply to the heater on and off – Pulse Width Modulation (PWM). This switching takes place over a cycle of approximately 2 seconds and always occurs at zero voltage to avoid radio frequency interference and voltage spikes. The "on" and "off" periods are varied in proportion to the amount of heating required, i.e. a required heating capacity of 75% will result in an "on" period of 1.5 seconds and an "off" period of 0.5 seconds.

CONTROLS

In a situation where multiple diffusers are controlled from a single controller, each diffuser will be fitted with its own triac that will receive a heating signal from the Primary controller. From the table "Maximum Recommended Heater Output (Watts)" at the end of this section, notice that for each neck total pressure there is a specific heater output quoted. For each diffuser size a standard heater capacity is referenced e.g. in the case of a VCD 250 diffuser, the re-heater sleeve would be factory fitted with a 1500 watt heater. By utilizing the RICKARD MLM or MLM Interoperable BMS Compatible Controls, the heater can be electronically set for an output from 100 to 1500W to match the design engineer's requirements. If the diffuser neck total pressure were to be set to 50Pa and the minimum desired air flow was 30% of maximum with a 17°C temperature rise, the heater output for a VCD 250 should be set to 1350 watts. Please refer to the MLM software help section for setup information.

IMPORTANT ELECTRICAL INFORMATION: Electrical reticulation should be designed to manage the heaters full capacity i.e. when a heater is set to 50%, the heater element draws the same current as it would when set to 100% but only draws it for 50% of the time.

SELECTION GUIDELINES

When calculating heater capacities for VAV diffusers, please keep in mind that heating in the cooling mode takes place when the diffuser is supplying minimum air flow. Care must therefore be taken to ensure that excessive supply air temperature rises are avoided. Discharge temperatures in excess of 32°C are likely to cause stratification within the room. As a guide-line, the temperature of the air leaving the diffuser should not be more than 10°C above room temperature. Please refer to the "Maximum Recommended Heater Output (Watts)" table on page 3 for each diffuser size. These heater output ratings calculated to ensure that the heat rise is no more than 15°C in VAV diffusers and 10°C in CAV diffusers. Please note that these values are a guide and are calculated at 30% volume for VAV diffusers and 100% volume for CAV diffusers.

IMPORTANT: These maximum capacities do not take into account limitations of the triac which are rated at 12A maximum. This reduces the capacity of the triac at low voltage supply.

ELECTRICAL AND OVERHEAT SAFETIES

NOTE: The following safeties should not exclude duct airflow safeties and a dedicated heater electrical circuit. Please see the following Installation guidelines section.

Every Heater Module is fitted with a coiled electrical element inside a galvanised sheet metal enclosure. The heater elements is constructed from an incaloy material that does not glow when energised. This element is selected to reduce the risk of combustible materials igniting should they come into contact with the heater element itself. No combustible materials are used in the construction of a Rickard Diffuser or Heater Module. Rickard diffusers use a high spec flame retardant, self extinguishing polycarbonate plastic that is chlorine and bromine free with a UL94 V-0 rating at 1.5mm. The Heater modules are fitted with their own triac/heater driver and receive a proportional signal from the diffuser controls when heating is required. The triac receives its power from a separate power circuit. Dedicated plug tops can be fitted to the heater module on request.

Each heater modules is fitted with a number of safeties to reduce the risk of failure. The triac is fitted inside an electrically grounded metal enclosure that is physically attached to the heater module enclosure. This increases the electrical safety of the device should a short circuit occur. A fuse offers additional protection against large current surges and shorts. A Transient suppressor prevents the Triac from failing closed and therefore driving the heater permanently if a voltage surge occurred.

In some cases when no flow or very low flows occur in the ducting, it is necessary to limit the heaters output to avoid excessive heat build up in the diffuser. For this reason the triac is fitted with a temperature sensor and controls to limit the triac so that the supply air exiting the diffuser never rises above 50°C or 122°F.

As an added safety a power-reset 85°±5°C or 185±9°F (3000 cycles) safety cut-out is fitted as standard. The reset temperatures indicates the air temperature inside the overheat safety cut-out casing at which it operates. Rickard heater modules are designed so that the overheat safety cut-outs trigger when the neck Total pressure is approximately 30Pa or below. The trigger point can vary depending on a number of factors namely, excessively squashed or bent flex, neck size, heater size and damper position. Rickard controls do not activate its heaters below 20% flow damper position, thereby reducing the likelihood of the overheat safeties not triggering in the range described. Push-button type manual reset safeties are not recommended in conjunction with diffuser re-heaters.

For additional safety, RICKARD offer an Airflow Switch to interrupt power to the re-heater controls when there is insufficient airflow across the heater element. The switch is calibrated to disable the heater current valve below a static pressure of 12Pa (+/- 5Pa).

The switch operates as a dead man switch i.e. if the cable between the switch and the heater controls is unplugged, the heater will not operate.

STANDARD SAFETIES FITTED TO ALL VAV DIFFUSER TYPE (VCD1, VSD1, CCD3, CSD3, VSW1, CSW, WBD's , CLN's and VLN's)

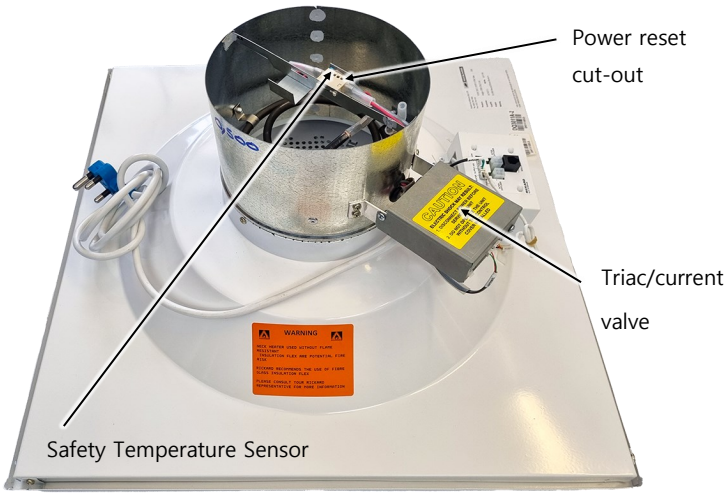

OPTIONAL AIRFLOW CUT-OUT/SWITCH

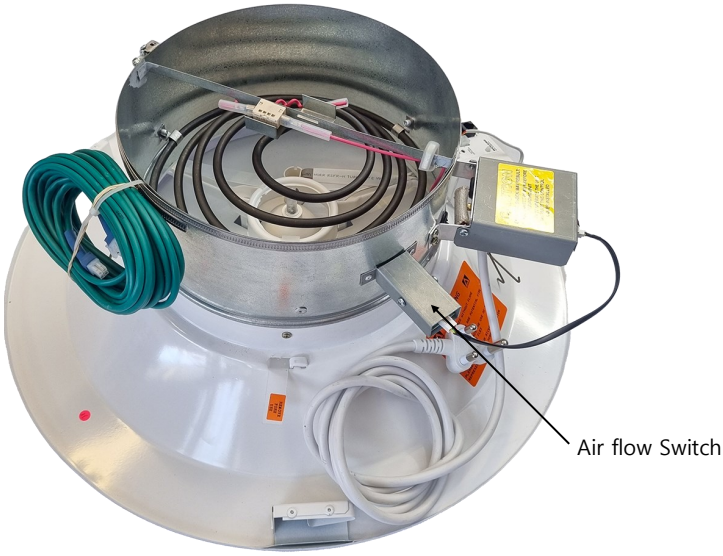

TESTING

All electrical wiring associated with the re-heater is carried out in the factory and all units are carefully tested for correct operation.

OPTIONS

- Heaters are available in various capacities, ranging from 0.5kW to 2.5kW.
- Airflow Switch to interrupt power to the re-heater controls when there is insufficient airflow across the heater element.

INSTALLATION GUIDELINES

Your duct design should supply between 30 and 60Pa total pressure at each diffuser to ensure adequate flow across the heaters.

Please ensure the ducting is fitted with an airflow interlock/paddle switch that cuts the power to the electrical reticulation serving the diffusers in the event of a loss of flow. This will ensure that the diffusers heaters are not energised when the AHU is off.

Rickard recommends a dedicated electrical outlet be fitted to the building heater reticulation and dedicated plug top be fitted to the diffusers . This will ensure that the airflow interlock always cuts power to the diffusers heaters and not other equipment plugged into the same circuit. This will also ensure that heaters are always plugged into a protected circuit.

Please see the "Electric Plug Ordering" Document for more details to order the correct plug top for your installation.

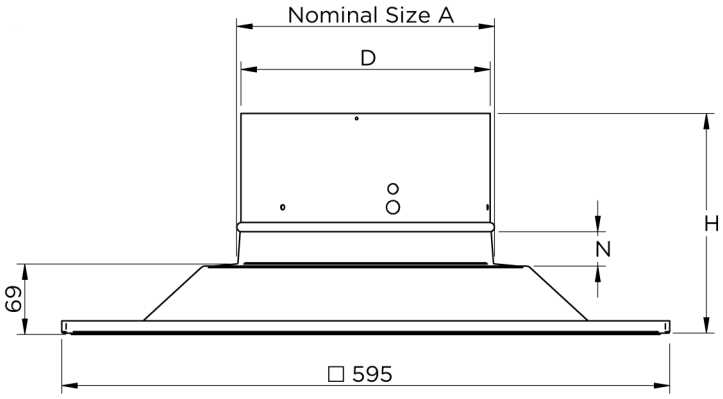

NOMINAL SIZE A	NECK DIAMETRE Ø D (mm)	NECK HEIGHT Ø N (mm)	OVERALL HEIGHT Ø H (mm)
150	148	26	211
200	195	32	217
250	244	32	217
300	287	35	220
350	337	40	225

VCD	Max Heater Size for each neck extension height or heater type *																			
	Pa		20			30			40			50			60			70		
	Diffuser Neck Extension Height/ Type *		145 mm	200 mm	Other *	145 mm	200 mm	Other *	145 mm	200 mm	Other *	145 mm	200 mm	Other *	145 mm	200 mm	Other *	145 mm	200 mm	Other *
	Heater Size		kW			kW			kW			kW			kW			kW		
	VCD Neck Size (mm)	150	0.25	n/a	0.25	0.25	n/a	0.25	0.5	n/a	0.5	0.5	n/a	0.5	0.5	n/a	0.5	0.5	n/a	0.5
		200	0.5	n/a	0.5	0.75	n/a	0.75	0.75	n/a	0.75	0.75	n/a	0.75	1	n/a	1	1	n/a	1
		250	0.75	n/a	0.75	1	n/a	1	1	n/a	1	1.25	n/a	1.25	1.25	n/a	1.25	1.25	n/a	1.25
		300	1	n/a	1	1.25	n/a	1.25	1.5	n/a	1.5	1.5	n/a	1.5	1.5	n/a	1.5	2	n/a	2
		350	1.25	n/a	1.25	1.5	n/a	1.5	1.5	n/a	1.5	1.5	n/a	1.5	2	n/a	2	2.5	n/a	2.5

VSW	Max Heater Size for each neck extension height or heater type *																		
	Pa		30			40			50			60			70		
	Diffuser Neck Extension Height/Type *		145 mm	200 mm	Other *	145 mm	200 mm	Other *	145 mm	200 mm	Other *	145 mm	200 mm	Other *	145 mm	200 mm	Other *
	Heater Size		kW			kW			kW			kW			kW		
	VSW Neck Size (mm)	150	0.25	n/a	0.25	0.25	n/a	0.25	0.5	n/a	0.5	0,5	n/a	0,5	0.5	n/a	0.5
		200	0.5	n/a	0.5	0.75	n/a	0.75	0.75	n/a	0.75	0.75	n/a	0.75	0.75	n/a	0.75
		250	0.75	n/a	0.75	1	n/a	1	1	n/a	1	1.25	n/a	1.25	1,25	n/a	1,25
		300	1	n/a	1	1.25	n/a	1.25	1.25	n/a	1.25	1,5	n/a	1,5	1.5	n/a	1.5

* Other: In-line Heater/Side Entry Plenum.

The largest heater shown for each neck size creates a heat rise of +/- 15°C when the damper closes down to minimum position i.e. the diffusers default minimum position is set to supply 30% air volume when the heaters are activated. If the diffusers minimum is reduced a larger heat rise will result.

	Max Heater Size				
	Pa	20	30	40	50
	Size (mm)	kW			
WBD	300/100	0.25	0,5	0.5	0.5
	350/100	0.5	0.5	0.75	0,75
	400/100	0.5	0,75	0.75	0.75
	450/100	0.75	0.75	0.75	1
	500/100	0.75	0.75	1	1
	550/100	0,75	1	1	1.25
	600/100	0.75	1	1.25	1,25
	650/100	1	1	1,25	1.5
	500/150	1	1,25	1.5	1.5
	550/150	1.25	1.25	1.5	1.5
	600/150	1.25	1.5	1.5	2
	650/150	1.25	1.5	2	2
	700/150	1.25	1.5	2	2.5
	800/150	1,75	2	2,5	2,5

	Max Heater Size						
	Pa		30	40	50	60	70
	Heater Size		kW				
VLN1 2 Slot	Track Length	600mm	0.25	0.25	0.5	0,5	0.5
		900mm	0.5	0.75	0.75	0.75	0.75
		1200mm	0.5	1	1	1.25	1,25
		1500mm	0.75	1.25	1.25	1,5	1.5

The largest heater shown for each neck size creates a heat rise of +/- 15°C when the damper closes down to minimum position i.e. the diffusers default minimum position is set to supply 30% air volume when the heaters are activated. If the diffusers minimum is reduced a larger heat rise will result.

	Max Heater Size for each neck extension height or heater type																			
	Pa		20			30			40			50			60			70		
	Diffuser Neck Extension Height/ Other Type *		145 mm	200 mm	Other *	145 mm	200 mm	Other *	145 mm	200 mm	Other *	145 mm	200 mm	Other *	145 mm	200 mm	Other *	145 mm	200 mm	Other *
	Heater Size		kW			kW			kW			kW			kW			kW		
CCD	CCD Neck Size (mm)	150	0.5	1	1.25	0.5	1	1.5	0.5	1	1.5	0.5	1	2	0.5	1	2	0.5	1	2
		200	1	1.5	1.5	1	1.5	2	1	1.5	2.5	1	1.5	2.5	1	1.5	2.5	1	1.5	2.5
		250	1	1.5	2	1	1.5	2.5	1	1.5	2.5	1	1.5	2.5	1	1.5	2.5	1	1.5	2.5
		300	2.5	2.5	2.5	2.5	2.5	2.5	2.5	2.5	2.5	2.5	2.5	2.5	2.5	2.5	2.5	2.5	2.5	2.5
		350	2.5	2.5	2.5	2.5	2.5	2.5	2.5	2.5	2.5	2.5	2.5	2.5	2.5	2.5	2.5	2.5	2.5	2.5

	Max Heater Size for each neck extension height or heater type																			
	Pa		20			30			40			50			60			70		
	Diffuser Neck Extension Height/ Other Type *		145 mm	200 mm	Other *	145 mm	200 mm	Other *	145 mm	200 mm	Other *	145 mm	200 mm	Other *	145 mm	200 mm	Other *	145 mm	200 mm	Other *
	Heater Size		kW			kW			kW			kW			kW			kW		
CSW	CSW Neck Size (mm)	150	0.5	0.75	0.75	0.5	0.75	0.75	0.5	0.75	1	0.5	0.75	1	0.5	0.75	1	0.5	0.75	1.25
		200	1	1.25	1.25	1	1.25	1.25	1	1.25	1.5	1	1.25	1.5	1	1.25	2	1	1.25	2
		250	1.25	1.5	1.5	1.25	2	2	1.25	2	2	1.25	2	2.5	1.25	2	2.5	1.25	2	2.5
		300	2	2	2	2.5	2.5	2.5	2.5	2.5	2.5	2.5	2.5	2.5	2.5	2.5	2.5	2.5	2.5	2.5

* Other: In-line Heater/Side Entry Plenum.

Orange cells indicate In-line Heaters/Side Entry Plenums that require 2 heater elements and 2 triacs.

The largest heater shown for each neck size creates a heat rise of +/- 10°C when the damper is 100% open. A heat rise of >10°C will occur when damper positions are less 100% open.