RICKARD

INTELLIGENT COMFORT CONTROL

CONSTANT VOLUME SWIRL DIFFUSER

CSW, CRW3

9

- EASY VOLUME ADJUSTMENT
- EXCELLENT MIXING
- LOW PRESSURE LOSS
- HIGH INDUCTION RATES
- LOW NOISE
- NO MAINTENANCE
- HEATING AND COOLING
- TERMINAL REHEAT AVAILABLE

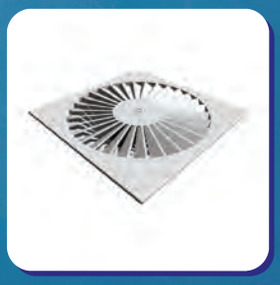

FEATURES

The RICKARD Constant Volume Swirl Diffusers (CSW/CRW) have been designed to provide a cost effective outlet that provides excellent levels of comfort in an architecturally pleasing package.

OPERATION

Damper adjustment is easily accessible via a screw driver slot in the diffuser face.

PERFORMANCE

Traditional designs suffer from dumping at minimum because a butterfly damper controls volume at the inlet of a plenum and not at the outlet. Rickard limits this effect by positioning the damper closer to the outlet and uses an aerodynamically shaped back-pan instead of a plenum.

Swirl diffusion pattern creates excellent mixing.
Good Coanda, Velocity and Throw at all diffuser damper positions.
Good Air Change Effectiveness.
Good ADPI values.

EASY INSTALLATION

Included plastic packaging can be used to protect the tile once installed.

CAPITAL & OPERATING COST

Low diffuser height (125mm) can reduce a buildings overall cost by reducing the height of the ceiling void.

AESTHETICS

Available in Round (CRW) for skimmed ceilings and Square (CSW) for drop-in ceiling Tee applications.
High Quality Epoxy Powder Coated Finish available in a wide range of colours. Matt White comes as standard.

MAINTENANCE

No regular maintenance is required.

APPLICATION

INTERNAL ZONES AND ZONES WITH A CONSTANT LOAD

COOLING & HEATING

PROPORTIONAL TERMINAL REHEAT

HEATING WITH STAND ALONE OR BMS CONTROLS

HEATING WITH OR WITHOUT REMOTE SETPOINT

The RICKARD Constant Volume Swirl Diffusers (Types CSW and CRW) are primarily intended for use in internal zones of buildings where good air mixing is required for improved occupant comfort. Normally these zones are less complex to air condition as load fluctuations are not as severe as those on building perimeter zones. The Constant Volume Swirl Diffuser, as its name implies, does not automatically regulate the air volume entering the conditioned space - they are constant volume devices. Consequently, room temperatures will vary with room loads (assuming the duct air temperature and pressure remain constant).

Should this method be decided upon, care should be taken in selection of the CSW and CRW diffusers to ensure dumping does not take place at minimum air flow status.

The Rickard CSW and CRW diffusers can be used to supply spaces that require heating or cooling. To ensure that dumping does not occur in cooling and stratification in heating care must be taken to supply the diffusers with adequate pressure.

Constant Volume Swirl Diffusers can be used to supply top up heating when required. This is achieved by fitting them with a Rickard neck heater.

OPERATION

Although the CSW is a constant volume terminal device, the air volume flow rate may be adjusted manually to obtain the required design air flow. This is achieved by manually adjusting the control disc up or down using the screw driver slot located in the face of the trim.

SELECTION

The most important practical factors to consider in internal zones are noise levels and uniform air distribution without "dumping" or "coning" effects. "Dumping" is the tendency for cold, dense air to leave the diffusers as a vertical column similar to a waterfall.

The effect of dumping is to overcool the person immediately below the diffuser while the person further away will not be cooled enough.

Dumping is eliminated by ensuring that the discharge air energy from the diffuser is adequate to distribute conditioned air evenly throughout the conditioned area and at the same time provide good secondary room air induction rates. Providing the total pressure in the neck of the RICKARD CSW diffuser selected is not too low, dumping of conditioned cold air will not take place. The CSW is designed to be resistant to dumping.

In the context of radial discharge ceiling diffusers, 'coning' occurs when two air streams travelling in opposite directions meet. As a result a downward moving cone of air is produced this will have a similar effect to dumping. Coning is substantially reduced with the use of swirl diffusers, but it can be avoided completely by ensuring that CSW/CRW diffusers are placed far enough apart to eliminate drafts in the conditioned spaces. The Table CAV Swirl Diffuser Performance Data shows the distance from the centre of a CSW/CRW at which air velocity has reduced to 0.25 m/s (the 'throw' of the diffuser). Using this information, CSW/CRW diffusers should be situated in the ceiling such that two adjacent diffusers are separated by slightly less than the sum of their throws.

Exactly how much less depends largely on the ceiling height and the amount of air movement desired in the conditioned spaced. If the CSW/CRW is used in conjunction with Variable Linear Diffusers or Side Wall VAV Units, their throws should also be considered

DETERMINING MAXIMUM CEILING HEIGHT

The drawing below describes how to determine the maximum ceiling height that can be achieved from a diffuser. Please see the diffuser performance data page for airflow, throw, noise and pressure information.

DETERMINING DETRMAXIMUM CEILING HEIGHT

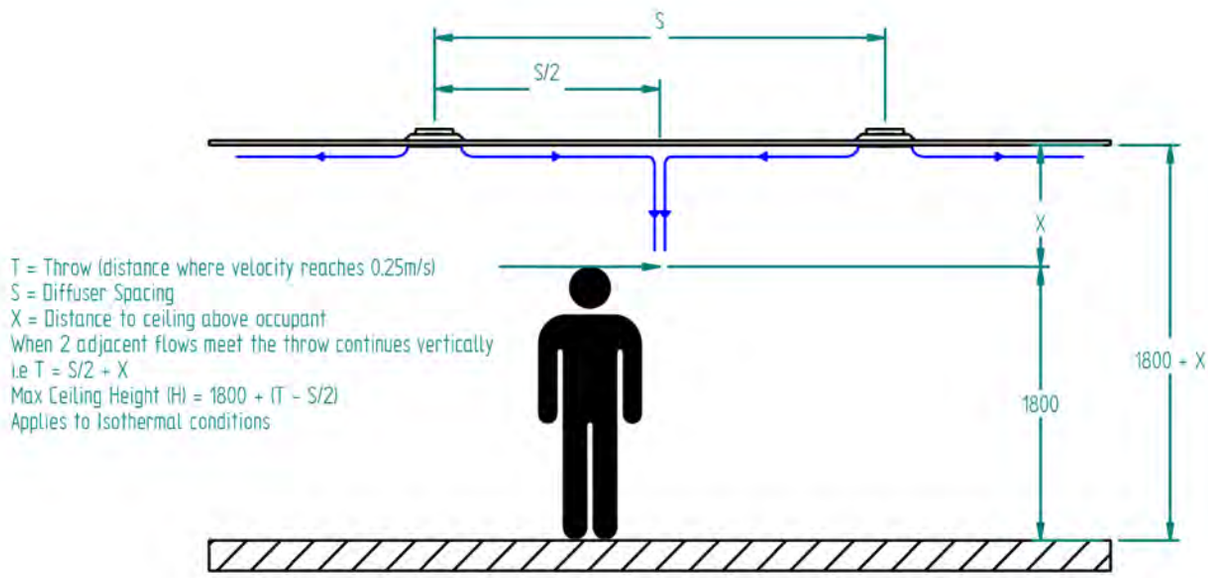

TYPES

CSW ***150 to 300mm*** ***S595 & 603mm***	***CRW*** ***150 to 300mm*** ***R580mm***

OPTIONS

JUBILEE CLAMP: Saves time and material when attaching the flex.

CSW3 & CRW3						
SIZE	READING	NECK TOTAL PRESSURE (Pa)				
		30	40	50	60	70
150	FLOW l/s	68	79	88	96	104
	THROW m	1.8	2.1	2.3	2.5	2.7
	NC LEVEL	27	29	31	33	35
200	FLOW l/s	112	130	145	159	172
	THROW m	2.2	2.5	2.8	3.1	3.3
	NC LEVEL	28	31	33	35	37
250	FLOW l/s	159	183	205	225	243
	THROW m	2.9	3.3	3.7	4.1	4.4
	NC LEVEL	29	33	35	37	39
300	FLOW l/s	194	224	250	274	296
	THROW m	2.9	3.3	3.7	4.1	4.4
	NC LEVEL	30	33	36	38	40

Throw is measured with the diffusers control disc fully open, 25mm below the ceiling following a line through the centre of the diffuser at the point at which the airs velocity reaches 0.25m/s.

Noise criteria levels apply to a single diffuser mounted in a room having a Sound Absorption of 10dB in octave bands having center frequencies from 125Hz to 8000Hz (i.e. the difference between Sound Pressure Level (dB re: 10^{-6} Pa) and Sound Power Level (dB re: 10^{-12} watts) is equal to 10dB). These levels represent only the noise generated by the diffuser and do not take into account any duct-borne noise.

Diffusers are shipped fully open.

Performance Data applies to Standard Air having a density of 1.2 kg/m3.

OPTIONS

The Rickard Swirl Diffuser Range supports a wide range of diffusion unit styles.

EXPOSED TEE CEILING GRID

1. SQUARE SWIRL DIFFUSER
   i. Drop-in Flush Mounting
   ii. Drop-in Shadow Line

The standard swirl drops into a square opening between ceiling tees. Flush Mounting and Shadow Line styles are available. These can be supplied with the following mounting plate sizes, 595x595mm & 23¾ x23¾" to suit 600x600mm & 24x24" ceiling grids respectively. Specials sizes are available on request.

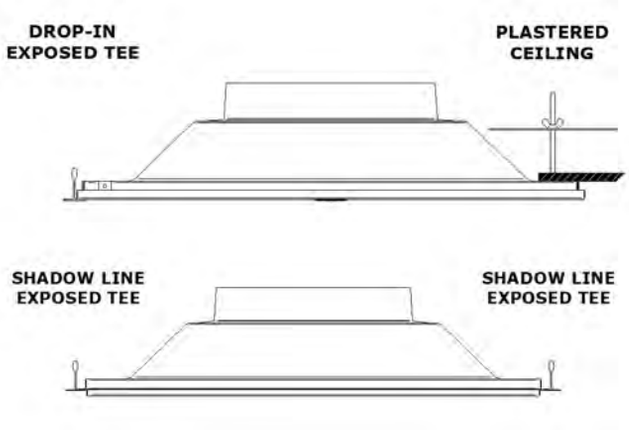

BAFFLED CEILING

1. SQUARE SWIRL
   i. 4 Point Fixing (4 Brackets for threaded rod connection)
2. ROUND DIFFUSER
   i. 3 Point Fixing (3 Brackets for threaded rod connection)
   ii. Hard Duct Connection (no accessories required)

Baffled ceilings require an unusual treatment which is not illustrated. Normally this ceiling requires a square tile with suspension points fitted at each corner thereby enabling support from the top edges of the baffles. Large diffuser mounting plates are particularly beneficial in the baffled ceiling as there is otherwise little opportunity for the Coanda effect to help distribute conditioned air across the ceiling. This may result in inadequate throws and poor room air movement.

PLASTERED CEILING

1. SQUARE SWIRL
   i. 4 Point Fixing (4 Brackets with Backing Plates)
   ii. T-Frame (To allow Drop-in Flush Mounting)

In the case of mounting square diffusers into plastered ceilings, two methods of fixing may be used. Concealed fixing is achieved by four fixing studs secured in the corners of the mounting plate. These pass through the ceiling and, with the use of backing plates, are used to secure the diffuser to the ceiling. A further option for fixing into a plastered ceiling is with the use of a T-frame which is an optional extra. This is fixed to the ceiling and the diffuser then drops into it.

4 POINT FIXING (4 BRACKETS WITH BACKING PLATES)

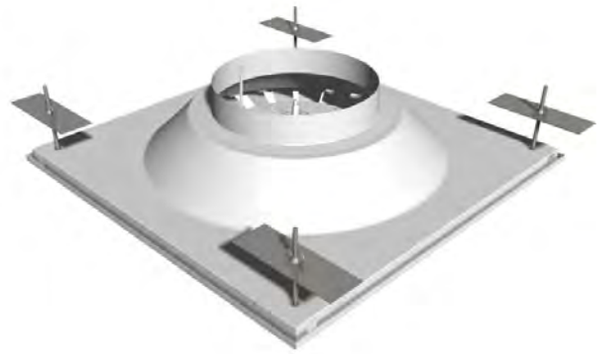

T-FRAME (DROP-IN MOUNTING FOR PLASTERED CEILINGS)

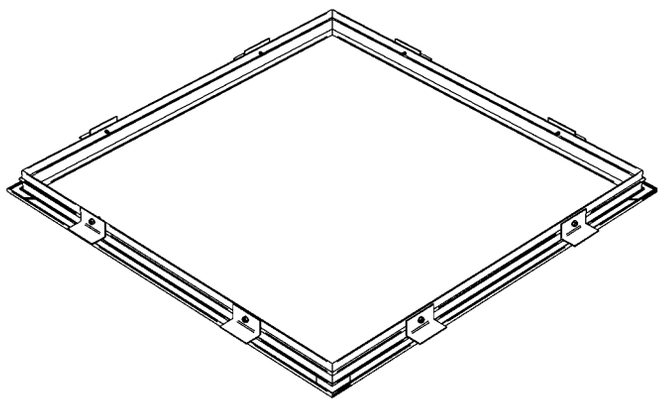

2. ROUND DIFFUSER
   i. T-Ring (Frame to allow Drop-in Flush Mounting)

Apart from the usual four-corner style, the Rickard Swirl Diffuser is also available in a circular format. This model is most often combined with round down-lighters to preserve the circular pattern, and in particular with plastered ceilings. It also offers the absolute minimum interruption to the ceiling for those who prefer to have its unbroken regularity maintained.

Fixing of round diffusers in a plastered ceiling often presents a problem because of restricted access to the ceiling void. This problem is overcome with a T-Ring to allow Drop-in Flush Mounting of a standard Round Swirl Diffuser. The T-Ring is mounted flush with the ceiling after a round hole with a diameter of 590-600mm is cut into the plaster board. Four threaded brackets draw the T-Ring flush against the ceiling to ensure a neat finish.

T-RING (DROP-IN MOUNTING FOR PLASTERED CEILINGS)

SWIRL DIFFUSER GENERAL DIMENSIONS

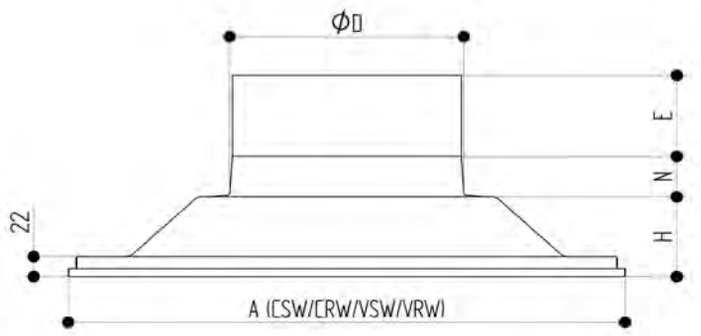

Nominal Size	Dimensions (mm)							
	Ø D	A	H	N	Ø R	E		
						Heater Neck	Airflow Sensor	Airflow Switch
150	153	595 x 595	95	28	580	90	115	125
200	200	595 x 595	92	33				
250	250	595 x 595	89	34				
300	293	595 x 595	86	35				

SWIRL DIFFUSER WITH PLENUM GENERAL DIMENSIONS

(Use when ceiling space is limited)

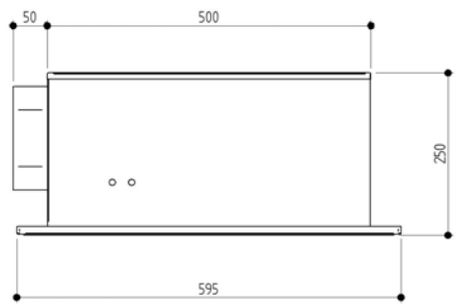

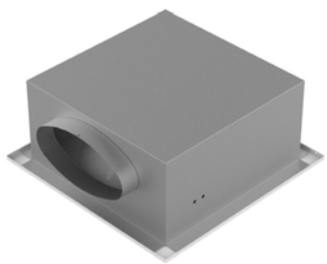

Note: Plenums create a significant pressure drop

(Performance data will not apply)

Swirl Diffuser Style			Swirl Diffuser Mounting Types						
			Exposed Tee		Baffled Ceiling		Plastered Ceiling Surface Mounting		
Model	Swirl Diffuser Shape	Swirl Diffuser Size	Drop-in Flush Mounting	Drop-in Shadow Line	4 Point Fixing Brackets	3 Point Fixing Brackets	4 Point Fixing & Backing Plate	T-Frame	T-Ring
CSW3 or VSW1	Square	595x595	•	•	•	o	•	•	o
	Square	23¾"x23¾"	•	•	•	o	•	•	o
CRW3 or VRW1	Round	580	o	o	o	•	o	o	•

FEATURES

FORM FACTOR

RICKARD diffusers are fitted with electric re-heaters that are either housed in a modular sleeve (VCD1, VSD1, CCD3, CSD3, VSW1, CSW, WBD's , CLN's and VLN's) or fitted directly to the unit (WBD, VLN). The heaters are energised when additional heating is required in a room.

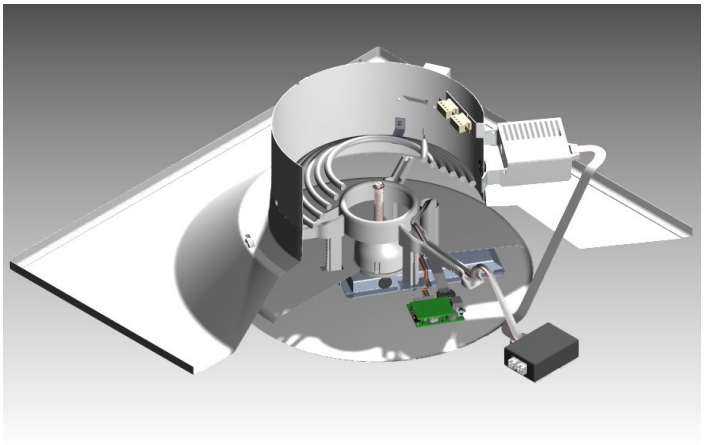

VAV PLATE DIFFUSER FITTED WITH MODULAR HEATER SPIGOT

WBD WITH DEDICATED HEATER FITTED

Electric heating can be considered to save energy when they are used to heat isolated offices that wouldn't be efficiently heated by raising the central plants temperature. The most efficient scenario in heating is for the central plant to supply sufficient heated air to allow most of the zones to be in control when the diffusers damper is close to minimum position. Zones that are colder are controlled by the diffuser opening further. Zones that cannot be satisfied by the diffuser supplying warm air at full volume are toped up with supplementary heating.

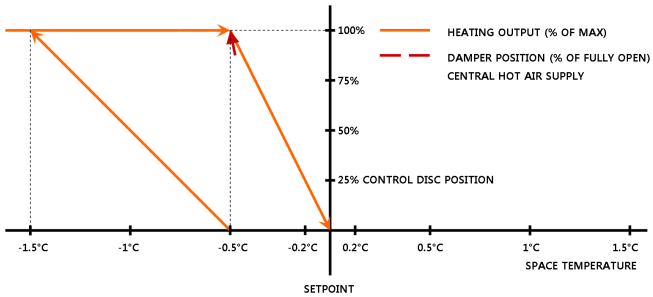

The most efficient scenario in cooling is for the central plant to supply sufficient cool air to allow most of the zones to be in control when the diffuser dampers are close to minimum position. Zones that are warmer can be controlled by the diffuser opening further. Zones that cannot be warmed sufficiently by reducing the cold air supply can be controlled by heating this reduced volume of air.

If the room temperature were to fall by 0.5°C below set point, the Triac Controller will commence energizing the heater proportionally and will fully energize the heater when the room temperature is approximately 1.5°C below set point.

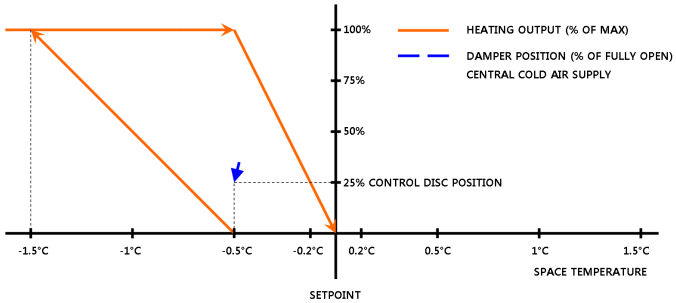

To ensure a building is efficiently heated it is necessary to integrate the Rickard VAV diffuser system with the central plant BMS. This is possible by using Rickard's MLM BMS Compatible Controls.

PROPORTIONAL HEATING

For accurate control of room temperature, the electric re-heater is controlled on a step-less, proportional basis. In addition to having a proportional output signal for cooling control, the temperature controller also has a proportional output signal for heating.

This is done by means of a triac switching set (current valve) which varies the heater output capacity by cycling the power supply to the heater on and off – Pulse Width Modulation (PWM). This switching takes place over a cycle of approximately 2 seconds and always occurs at zero voltage to avoid radio frequency interference and voltage spikes. The "on" and "off" periods are varied in proportion to the amount of heating required, i.e. a required heating capacity of 75% will result in an "on" period of 1.5 seconds and an "off" period of 0.5 seconds.

CONTROLS

In a situation where multiple diffusers are controlled from a single controller, each diffuser will be fitted with its own triac that will receive a heating signal from the Primary controller. From the table "Maximum Recommended Heater Output (Watts)" at the end of this section, notice that for each neck total pressure there is a specific heater output quoted. For each diffuser size a standard heater capacity is referenced e.g. in the case of a VCD 250 diffuser, the re-heater sleeve would be factory fitted with a 1500 watt heater. By utilizing the RICKARD MLM or MLM Interoperable BMS Compatible Controls, the heater can be electronically set for an output from 100 to 1500W to match the design engineer's requirements. If the diffuser neck total pressure were to be set to 50Pa and the minimum desired air flow was 30% of maximum with a 17°C temperature rise, the heater output for a VCD 250 should be set to 1350 watts. Please refer to the MLM software help section for setup information.

IMPORTANT ELECTRICAL INFORMATION: Electrical reticulation should be designed to manage the heaters full capacity i.e. when a heater is set to 50%, the heater element draws the same current as it would when set to 100% but only draws it for 50% of the time.

SELECTION GUIDELINES

When calculating heater capacities for VAV diffusers, please keep in mind that heating in the cooling mode takes place when the diffuser is supplying minimum air flow. Care must therefore be taken to ensure that excessive supply air temperature rises are avoided. Discharge temperatures in excess of 32°C are likely to cause stratification within the room. As a guide-line, the temperature of the air leaving the diffuser should not be more than 10°C above room temperature. Please refer to the "Maximum Recommended Heater Output (Watts)" table on page 3 for each diffuser size. These heater output ratings calculated to ensure that the heat rise is no more than 15°C in VAV diffusers and 10°C in CAV diffusers. Please note that these values are a guide and are calculated at 30% volume for VAV diffusers and 100% volume for CAV diffusers.

IMPORTANT: These maximum capacities do not take into account limitations of the triac which are rated at 12A maximum. This reduces the capacity of the triac at low voltage supply.

ELECTRICAL AND OVERHEAT SAFETIES

NOTE: The following safeties should not exclude ducting airflow safeties and a dedicated heater electrical circuit. Please see the following Installation guidelines section.

Every Heater Module is fitted with a coiled electrical element inside a Galvanised sheet metal enclosure. The heater elements is constructed from an Incaloy material that does not glow when energised. This element is selected to reduce the risk of combustible materials igniting should they come into contact with the heater element itself. No combustible materials are used in the construction of a Rickard Diffuser or Heater Module. Rickard diffusers use a high spec flame retardant, self extinguishing polycarbonate plastic that is chlorine and bromine free with a UL94 V-0 rating at 1.5mm. The Heater modules are fitted with their own Triac/Heater driver and receive a proportional signal from the diffuser controls when heating is required. The Triac receives its power from a separate power circuit. Dedicated plug tops can be fitted to the heater module on request.

Each heater modules is fitted with a number of safeties to reduce the risk of failure. The Triac is fitted inside an electrically grounded metal enclosure that is physically attached to the heater module enclosure. This increases the electrical safety of the device should a short circuit occur. A fuse offers additional protection against large current surges and shorts. A Transient suppressor prevents the Triac from failing closed and therefore driving the heater permanently if a voltage surge has occurred.

In some cases when no flow or very low flows occur in the ducting, it is necessary to limit the heaters output to avoid excessive heat build up in the diffuser. For this reason the triac is fitted with a temperature sensor and controls to limit the triac so that the supply air exiting the diffuser never rises above 50°C or 122°F.

As an added safety an auto-reset 65°±5°C or 149±9°F(10 000 cycles) safety cut-out is fitted as standard. The reset temperatures indicates the air temperature inside the overheat safety cut-out casing at which it operates. Rickard heater modules are designed so that the overheat safety cut-outs trigger when the neck Total pressure is approximately 30Pa or below. The trigger point can vary depending on a number of factors namely, excessively squashed or bent flex, neck size, heater size and damper position. Rickard controls do not activate its heaters below 20% flow damper position, thereby reducing the likelihood of the overheat safeties not triggering in the range described. Push-button type manual reset safeties are not recommended in conjunction with diffuser re-heaters.

For additional safety, RICKARD offer an Airflow Switch to interrupt power to the re-heater controls when there is insufficient airflow across the heater element. The switch is calibrated to disable the heater current valve below a static pressure of 12Pa (+/- 5Pa).

The switch operates as a dead man switch i.e. if the cable between the switch and the heater controls is unplugged, the heater will not operate.

STANDARD SAFETIES FITTED TO ALL VAV DIFFUSER TYPE (VCD1, VSD1, CCD3, CSD3, VSW1, CSW, WBD's , CLN's and VLN's)

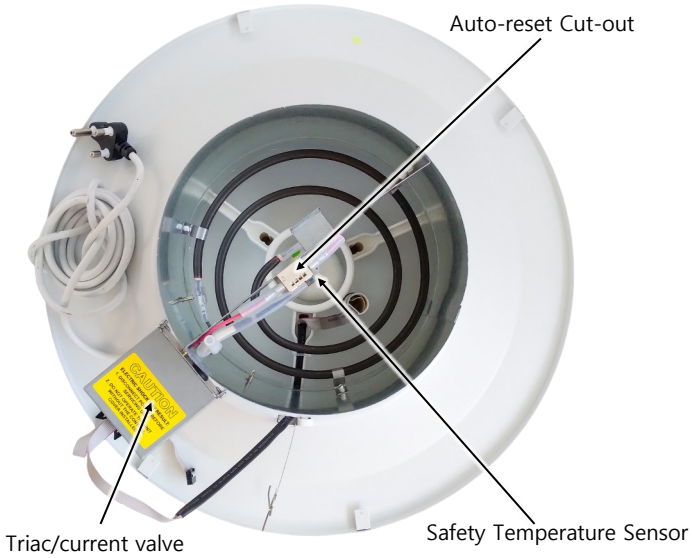

OPTIONAL AIRFLOW CUT-OUT/SWITCH

TESTING

All electrical wiring associated with the re-heater is carried out in the factory and all units are carefully tested for correct operation.

OPTIONS

- Heaters are available in various capacities, ranging from 0.5kW to 2.5kW.
- Airflow Switch to interrupt power to the re-heater controls when there is insufficient airflow across the heater element.

INSTALLATION GUIDELINES

Your duct design should supply between 30 and 60Pa total pressure at each diffuser to ensure adequate flow across the heaters.

Please ensure the ducting is fitted with an airflow interlock/paddle switch that cuts the power to the electrical reticulation serving the diffusers in the event of a loss of flow. This will ensure that the diffusers heaters are not energised when the AHU is off.

Rickard recommends a dedicated electrical outlet be fitted to the building heater reticulation and dedicated plug top be fitted to the diffusers . This will ensure that the airflow interlock always cuts power to the diffusers heaters and not other equipment plugged into the same circuit. This will also ensure that heaters are always plugged into a protected circuit.

Please see the "Electric Plug Ordering" Document for more details to order the correct plug top for your installation.

	Recommended Heater settings & sizing for up to a 15 Degree C Heat Rise @ 30% Open																	
	Pa	20			30			40			50			60			70		
	Neck Size	kW			kW			kW			kW			kW			kW		
		Adjust	Fit	Set	Adjust	Fit	Set	Adjust	Fit	Set	Adjust	Fit	Set	Adjust	Fit	Set	Adjust	Fit	Set
VCD	150	0.35	0.50	70%	0.34	0.50	68%	0.50	0.50	100%	0.50	0.50	100%	0.50	0.50	100%	0.50	0.50	100%
	200	0.60	0.75	80%	0.70	0,75	93%	0.75	0.75	100%	0.90	1.00	90%	1.00	1.00	100%	1.00	1.00	100%
	250	0.85	1.00	85%	1.00	1.00	100%	1.15	1.25	92%	1.25	1.25	100%	1.25	1.25	100%	1.25	1.25	100%
	300	1.00	1.00	100%	1.25	1.25	100%	1.50	1.50	100%	1.65	2.00	83%	1.75	2.00	88%	2.00	2.00	100%
	350	1.30	1.50	87%	1.50	1.50	100%	1.85	2.00	93%	1.85	2.00	93%	2.25	2.50	90%	2.50	2.50	100%

	Recommended Heater settings & sizing for a 15 Degree C Heat Rise @ 30% Open															
	Pa	30			40			50			60			70		
	Neck Size	kW			kW			kW			kW			kW		
		Adjust	Fit	Set	Adjust	Fit	Set	Adjust	Fit	Set	Adjust	Fit	Set	Adjust	Fit	Set
VSW	150	0,35	0,5	70%	0,4	0,5	80%	0,45	0,5	90%	0,5	0,5	100%	0,55	0,75	73%
	200	0,6	0,75	80%	0,7	0,75	93%	0,8	1	80%	0,85	1	85%	0,9	1	90%
	250	0,85	1	85%	1	1,25	80%	1,1	1,5	73%	1,2	1,25	96%	1,25	1,25	100%
	300	1	1	100%	1,2	1,5	80%	1,35	1,5	90%	1,5	1,5	100%	1,6	2	80%

	Recommended Heater settings & sizing for a 15 Degree C Heat Rise @ 30% Open															
	Pa	30			40			50			60			70		
VLN1 2 Slot Pattern C	Length (mm)	kW			kW			kW			kW			kW		
		Adjust	Fit	Set	Adjust	Fit	Set	Adjust	Fit	Set	Adjust	Fit	Set	Adjust	Fit	Set
	600	0,3	0,5	60%	0,35	0,5	70%	0,35	0,5	70%	0,4	0,5	80%	0,45	0,5	90%
	900	0,45	0,5	90%	0,55	0,55	100%	0,6	0,75	80%	0,65	0,75	87%	0,7	0,75	93%
	1200	0,65	0,75	87%	0,75	0,75	100%	0,8	1	80%	0,9	0,9	100%	1	1	100%
	1500	0,85	0,85	100%	1	1	100%	1,1	1,25	88%	1,2	1,2	100%	1,3	1,5	87%

	Recommended Heater settings & sizing for a 15 Degree C Heat Rise @ 30% Open											
	Pa	20			30			40			50	
	Size (mm)	kW			kW			kW			kW	
		Adjust	Fit	Set	Adjust	Fit	Set	Adjust	Fit	Set	Adjust	Fit	Set
WBD	300/100	0,4	0,5	80%	0,5	0,5	100%	0,55	0,75	73%	0,6	0,75	80%
	350/100	0,55	0,75	73%	0,65	0,75	87%	0,7	0,75	93%	0,75	0,75	100%
	400/100	0,6	0,75	80%	0,75	0,75	100%	0,8	1	80%	0,9	1	90%
	450/100	0,7	0,75	93%	0,8	1	80%	0,9	1	90%	1	1	100%
	500/100	0,7	0,75	93%	0,85	1	85%	0,95	1	95%	1,1	1,25	88%
	550/100	0,75	0,75	100%	0,95	1	95%	1,1	1,25	88%	1,2	1,25	96%
	600/100	0,9	1	90%	1	1	100%	1,2	1,25	96%	1,25	1,25	100%
	650/100	0,95	1	95%	1,15	1,25	92%	1,25	1,25	100%	1,45	1,5	97%
	500/150	1	1	100%	1,25	1,25	100%	1,6	2	80%	1,8	2	90%
	550/150	1,2	1,25	96%	1,4	1,5	93%	1,65	2	83%	1,85	2	93%
	600/150	1,4	1,5	93%	1,6	2	80%	1,9	2	95%	2	2	100%
	650/150	1,4	1,5	93%	1,7	2	85%	2	2	100%	2,2	2,5	88%
	700/150	1,5	1,5	100%	1,85	2	93%	2,2	2,5	88%	2,4	2,5	96%
	800/150	1,75	2	88%	2,1	2,5	84%	2,5	2,5	100%	2,5	2,5	100%

To limit stratification in heating Rickard recommends that the heater outputs be limited to the values published in the tables above. The calculated values will ensure that the heat rise is no more than 15°C in VAV diffusers and 10°C in CAV diffusers. Please note that these values are a guide and are calculated at 30% volume for VAV diffusers and 100% volume for CAV diffusers. By adjusting the diffuser damper position down, a smaller volume will create a larger heat rise and therefore increase the likelihood of stratification. The Fit column indicates the maximum fitted heater size recommended, the Adjust value indicates the maximum heater setting recommended to achieve a 15°C (VAV) or 10°C (CAV) heat rise and the Set column is the MLM Heater Output % value required to achieve a 15°C (VAV) or 10°C (CAV) heat rise.

CCD	Recommended Heater settings & sizing for a 10 Degree C Heat Rise @ 100% Open																		
	Pa	20			30			40			50			60			70		
	Neck Size (mm)	kW			kW			kW			kW			kW			kW		
		Adjust	Fit	Set	Adjust	Fit	Set	Adjust	Fit	Set	Adjust	Fit	Set	Adjust	Fit	Set	Adjust	Fit	Set
	150	1.30	1.50	87%	1.50	1.50	60%	1.75	2.00	88%	2.00	2.00	100%	2.25	2.50	90%	2.40	2.50	96%
	200	1.80	2.00	90%	2.25	2.50	90%	2.50	2.50	100%	2.50	2.50	100%	2.50	2.50	100%	2.50	2.50	100%
	250	2.30	2.50	92%	2.50	2.50	100%	2.50	2.50	100%	2.50	2.50	100%	2.50	2.50	100%	2.50	2.50	100%
	300	2.50	2.50	100%	2.50	2.50	100%	2.50	2.50	100%	2.50	2.50	100%	2.50	2.50	100%	2.50	2.50	100%
	350	2.50	2.50	100%	2.50	2.50	100%	2.50	2.50	100%	2.50	2.50	100%	2.50	2.50	100%	2.50	2.50	200%

Max Element Size before extending spigot length: 150mm = 0.75kW, 200mm = 1.25kW, 250mm = 1.5kW, 300mm = 2.0kW, 350mm = 2.5kW

CSW	Recommended Heater settings & sizing for a 10 Degree C Heat Rise @ 100% Open																		
	Pa	20			30			40			50			60			70		
	Neck Size (mm)	kW			kW			kW			kW			kW			kW		
		Adjust	Fit	Set	Adjust	Fit	Set	Adjust	Fit	Set	Adjust	Fit	Set	Adjust	Fit	Set	Adjust	Fit	Set
	150	0.70	0.75	93%	0.80	1.00	80%	1.00	1.00	100%	1.00	1.00	100%	1.15	1.25	92%	1.25	1.25	100%
	200	1.20	1.25	96%	1.30	1.50	87%	1.50	1.50	100%	1.75	2.00	88%	1.90	2.00	95%	2.00	2.00	100%
	250	1.80	2.00	90%	2.00	2.00	100%	2.25	2.50	90%	2.50	2.50	100%	2.50	2.50	100%	2.50	2.50	100%
	300	2.00	2.00	100%	2.40	2.50	96%	2.50	2.50	100%	2.50	2.50	100%	2.50	2.50	100%	2.50	2.50	100%

To limit stratification in heating Rickard recommends that the heater outputs be limited to the values published in the tables above. The calculated values will ensure that the heat rise is no more than 15°C in VAV diffusers and 10°C in CAV diffusers. Please note that these values are a guide and are calculated at 30% volume for VAV diffusers and 100% volume for CAV diffusers. By adjusting the diffuser damper position down, a smaller volume will create a larger heat rise and therefore increase the likelihood of stratification. The Fit column indicates the maximum fitted heater size recommended, the Adjust value indicates the maximum heater setting recommended to achieve a 15°C (VAV) or 10°C (CAV) heat rise and the Set column is the MLM Heater Output % value required to achieve a 15°C (VAV) or 10°C (CAV) heat rise.